VF1000.COM

http://honda.vf1000.com

The data contained in this file is for non-commercial use only. No warranties, express or implied, are given for the accuracy of this material.

HONDA

PARTS CATALOG

VF1000F '84
1000 Interceptor

AMERICAN HONDA MOTOR CO., INC.

© 1983 AMERICAN HONDA MOTOR CO., INC.

14MB6F

TABLE OF CONTENTS

HOW TO USE THIS CATALOG	1-A 2	II
SERIAL NUMBERS	1-A 3	IV
CONSTRUCTION OF VEHICLE IDENTIFICATION NUMBER (V.I.N)	1-A 3	V
COLOR TABLES	1-A 4	VI
MANUALS	1-A 5	IX
SPECIFICATIONS	1-A 6	XI
BULK HOSE	1-A 8	XIV
COMMONLY REQUIRED REPLACEMENT PARTS	1-A 9	XVI
CONTENTS BY PAGE NO. SEQUENCE	1-A 10	XVIII
PART GROUPS		
ENGINE GROUP	1-B 1	2
FRAME GROUP	1-D 1	46
INDEX		
PART NUMBER INDEX	1-G 1	116
DESCRIPTION INDEX	1-H 1	128

HOW TO USE THIS CATALOG

This parts catalog is to be used when ordering replacement parts for the model (s) specified on the microfiche title strip.

CATALOG PAGE BREAKDOWN

MODEL(S)			MODEL APPLICATION								AREA CODE	ENGINE SERIAL NUMBER		QTY REQ		
			1984	1985	1986	1987	1984	1985	1986	1987						
Ref. No.	BLOCK NO. DESCRIPTION	E-1	4	5	6	7	4	5	6	7		FROM	TO		PART NUMBER	HONDA CODE
1	2	3a	3								4	5		6	7	8

1. **Ref No.**– Reference number corresponding with the reference numbers on the illustrations. *
   * All illustrations are representative only and do not nescessarily correspond exactly to the actual part. "NI" signifies the part is not illustrated.
2. **DESCRIPTION**– Describes the part for the related part number.

   Abbreviations

ASSY	Assembly	MPH	Miles Per Hour
COMP	Complete	L (100)	Link (100 links)
R	Right	A.C.	Alternating Current
L	Left	D.C.	Direct Current
STD	Standard	IN	Inlet
MM	Millimeter	EX	Exhaust
G	Gram	FR	Front
T (22T)	Tooth	RR	Rear
A	Ampere	HEX	Hexagonal
V	Volt	A.M.	Attaching Mark
W	Watt	T.M.	Transcript Mark
KPH	Kilometer Per Hour	C.D.I.	Capacitive Discharge Ignition

   Decision for 'R' or 'L'

   R and L in the description of the part stands for the Right hand side or the left hand side which is decided by the forward direction of travel of the vehicle.
3. **Model Application**– Model application for the various models listed within the catalog. Single model applications will not require this section.

3a. **Model Year Guide**– A guide to the part application (prior to 1976 the guide reference is the model designation ie. K0, K1 etc.. For 1976 and above the guide reference is the last digit of the model year ie. 1976 = 6; 1977 = 7; 1985 = 5 etc.). Other unique designations may be used in catalogs listing different models.

4. **AREA CODE**– Area codes for parts that are unique to a particular area. Area codes are defined in the Serial Number application chart when applicable. This column will not be used in catalogs which do not include unique area codes.
5. **SERIAL NUMBER**– Applies to Engine or Frame serial numbers depending on the section.

   The serial number of the vehicle (frame, engine, carburetor) should be checked prior to ordering parts for a specific unit. In cases where a part has been modified, the serial number of the vehicle bearing the modification is listed in the 'SERIAL NUMBER' column.

   The modification parts are controlled by each pertinent serial number below:

   Engine serial number - Engine group parts (Block numbers beginning with 'E').

   Carburetor identification number - Carburetor component parts.

   Frame serial numbers - Frame group parts (Block numbers beginning with 'F').

HOW TO USE THIS CATALOG

Serial number application chart and Serial number locations are provided.

Note: Some models may be controlled by one serial number only.

6. **QTY REQ**– Quantity required per unit as specified.
   A. 'AR' in place of the quantity indicates AS REQUIRED.
   B. '()' Parenthesis in the quantity required column indicates 'optional'. (only the open parenthesis will appear if the quantity required is over 9).
7. **PART NUMBER**– Part number corresponding to the reference numbers and application. Several part numbers may be listed under one (1) reference number. For your convenience the current supersede chain, as of print date, has been listed for you. Supersede chains are subject to change without notice.

MAKE-UP OF PART NUMBERS

All parts are classified into two groups consisting of 'GENERAL PARTS' and 'STANDARD PARTS'. All parts are numbered in accordance with system described below:

General Parts

Example:

Fork comp. Fr. Part No 51105-GR1-700ZA
Function No 51
Component No 105
Parts Classification No ..... -GR1-
Classification No 700
* Color Code ..... ZA

Standard Parts

Example:

Screw, Pan 4 x 20 Part No 93500-04020-1A
Function No 93
Type No 500
Dimensions ..... -04020-
ISO Standard Designation 1
Chemical Surface Treatment ..... A

* The color code at the end of a General Part's part number indicate the color. However, color codes such as ZA, ZB, ZC onward except ZZ, do not indicate the color directly but refer to the notes "* *" in the Description Column of this Parts Catalog Microfiche. If the color description is not indicated in the description, refer to the color table.

8. **H/C**– The Honda Code is listed to the right of each Part Number.

A. **Additional Information**– The table of contents located at the right of each microfiche grid lists sectioned titles in alphabetical order. Some microfiche will require separate tables of contents for the Engine and frame sections which will be noted in a sub-heading.

NOTE:

1. The Block No. listed in the upper right hand corner of the Description heading refers to a complete illustration page and it's text, and should not be confused with the GRID NO when using microfiche.
2. Rear view mirrors are standard equipment on all street legal models.

SERIAL NUMBERS

Models and applicable serial numbers

Models and applicable serial Nos. given in this parts catalog can be identified as follows.

Model	Area Code	Unique Area	Applicable Engine Serial No.	Applicable Frame Serial No.	Applicable Carburetor Identification No.
VF1000F '84	A	EXCEPT CALIFORNIA	SC15E- 2000043 To 2009450	SC150* EM000017 To EM003753	VD72A [A]
VF1000F '84	AC	CALIFORNIA	SC15E- 2000060 To 2010776	SC151* EM000003 T. EM000627	VD75A [A]

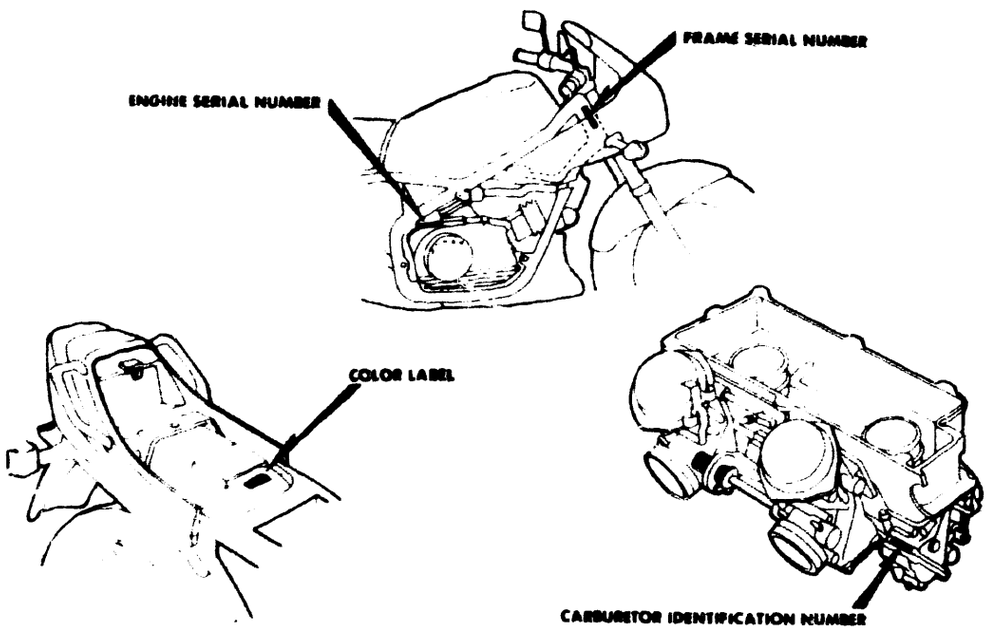

CONSTRUCTION OF VEHICLE IDENTIFICATION NUMBER (V.I.N)

W.M.I. V.D.S. V.I.S.

(Example) J H 2 R C 0 4 0 - B M 2 0 0 0 0 1

W.M.I. ...World manufactuer identifier
V.D.S. ...Vehicle descriptor section
V.I.S. ...Vehicle indicator section

Sequential Production number

Plant representation

C...SAITAMA Factory in JAPAN
K...KUMAMOTO Factory in JAPAN
M...HAMAMATSU Factory in JAPAN
S...SUZUKA Factory in JAPAN
A...OHIO Factory in U.S.A.
B...AALST Factory in BELGIUM
R...MANAUS Factory in BRAZIL
D...GUADALAJARA Factory in MEXICO

Model year

(Example)
B...1981 C...1982 D...1983 ·····X...1999

Check digit

This code is used to detect errors in the V.I.N. and consists of a single-digit number (0-9) or a letter "X". It has no direct bearing upon the V.D.S. and V.I.S.

Vehicle description code

(Example) RC040...CB750F NC030...CB400T
Refer to: SERIAL NUMBERS

Make and Type of vehicle

JH2...HONDA, Motorcycle (Manufactured in JAPAN)
1HF...HONDA, Motorcycle (Manufactured in U.S.A.)
YC1...HONDA, Motorcycle (Manufactured in BELGIUM)
9C2...HONDA, Motorcycle (Manufactured in BRAZIL)
3H1...HONDA, Motorcycle (Manufactured in MEXICO)
JH3...HONDA, all terrein vehicle (Manufactured in JAPAN)

Any change or modification of parts is directly related to the V.D.S. and V.I.S.
A V.I.S. number will appear in the "Serial No." column of the Parts Catalog if a part is changed or modified.

COMMENT:
This example is general and applies to 1981 and newer vehicles. 1980 models and prior are referred to as "FRAME NUMBERS" and the construction is designed by using the model designation or code followed by a sequential number.

COLOR TABLES

Color chart

- (WL) = Stripes and labels other than caution labels are included in parts whose part name end in (WL).
- (WOL) = Stripes and labels are not included in parts whose part name end in (WOL).

COLOR CODE TABLE (Color descriptions omitted from the main text of the catalog)

TYPE OF PARTS	COLOR CODE	COLOR DESCRIPTION
PAINTED PARTS	A	WHITE
	B	BLACK
	C	SCARLET
	E	ROYAL BLUE
	N	DARK BLUE
	Q	MARUEM BLUE
	R	IVORY YELLOW
	S	DARK SILVER
	T	METALLIC SILVER
	XW	CHROME
	Z	PRIMER
	ZZ	PRIMER
VINYL PARTS	A	BLACK
	B	BLUE
	D	LIGHT BLUE
	E	SCARLET
	G	DARK ROSE
	N	ELEPHANT GRAY & IVORY
	Q	WHITE
	V	IVORY

COLOR TABLES

Color application chart

- When ordering a part of a particular color or type, refer to the chart below for the model color and color label application.
- (WL) = Stripes and labels other than caution labels are included in parts whose part name end in (WL).
- (WOL) = Stripes and labels are not included in parts whose part name end in (WOL).

MODEL	VF1000F$_E$ '84
COLOR	Sha a White
COLOR CODE	NH-138
COVER SET, SIDE	NH138
TANK SET, FUEL	NH138
TANK SET, FUEL A/C: A	NH138
COWL SET, FR. SIDE A/C: AC	NH138
FENDER COMP., FR.	NH138
COWL SET, RR.	NH138
COWL SET, RR.	TYPE 1
COWL SET, FR. CENTER	NH138
COWL SET, FR. CENTER	TYPE 1
COWL SET, UNDER	NH138
COWL SET, UNDER	TYPE 3
STRIPE A, FR. COWL	TYPE 1
STRIPE B, FR. COWL	TYPE 1
STRIPE, FUEL TANK	TYPE 1
STRIPE, SIDE COVER	TYPE 1
STRIPE, RR. COWL	TYPE 1
MARK, RR. COWL	TYPE 1
MARK, UNDER COWL	TYPE 3
SEAT ASSY., DOUBLE	B43L
BODY COMP., FRAME A/C: A	NH104MU
BODY COMP., FRAME A/C: AC	NH104MU
SUB FRAME COMP. A/C: A	NH104MU

(Continued)

COLOR TABLES

Color application chart

- When ordering a part of a particular color or type, refer to the chart below for the model color and color label application.
- (WL) = Stripes and labels other than caution labels are included in parts whose part name end in (WL).
- (WOL) = Stripes and labels are not included in parts whose part name end in (WOL).

MODEL	VF1000F$_E$ '84
COLOR	Shasta White
COLOR CODE	NH-138
SUB FRAME COMP A/C: AC	NH104MU
LABEL FR FORK CAUTION	NH1
MARK DRIVE CAUTION	NH1

Note When applicable "From" and "To" followed by a Serial Number in the Description column, indicates the application range when present. "A/C" followed by a code indicates the Area Code.

MANUALS

DESCRIPTION	MANUAL NUMBER	H/C
VF1000F '84 SERVICE MANUAL	61MB600	1671809
VF1000F '84 OWNER'S MANUAL	31MB6600	1671817

MODEL ID PHOTO

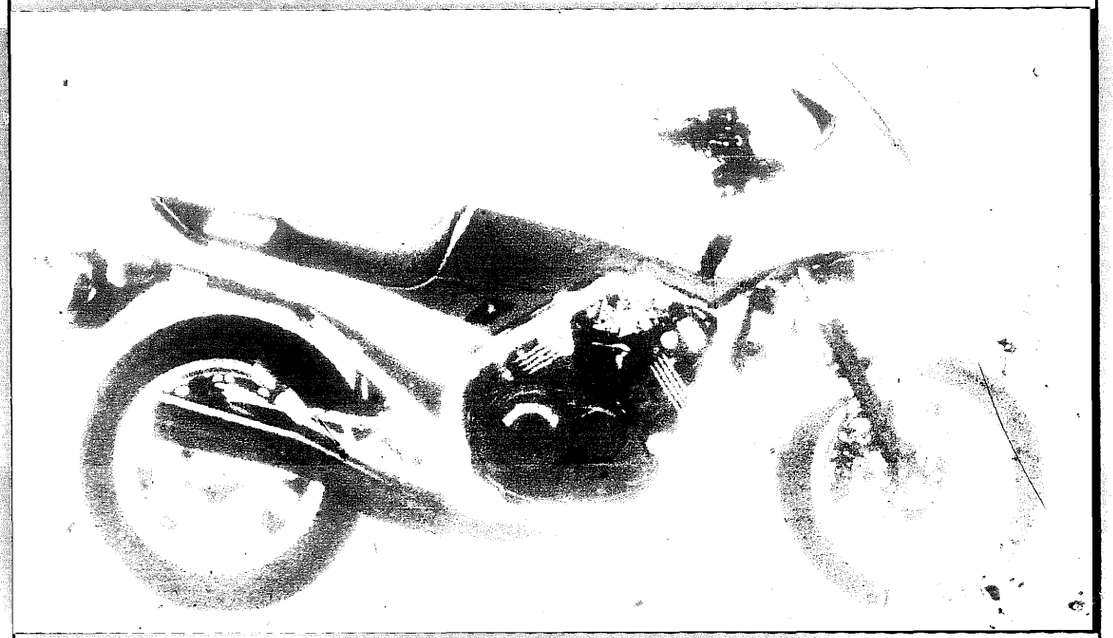

VF1000F'84 1000 INTERCEPTOR

SPECIFICATIONS

SECTION/SUBJECT	VF1000F'84	
ENGINE		
Cylinder	Four Cylinders	
Strokes	4-Stroke	
Cooling	Liquid Cooled	
Camshaft	DOHC	
Valves per cylinder	4	
Displacement	998cc	
Lubrication system	Wet Sump	
Carburetor	CV:49st- 36mm,CAL- 32mm	
Main jet	49st: #150-145-CA-#112 100	
Slow jet	CA #38 (49st: #38)	
TRANSMISSION		
Transmission type	Manual	
Transmission speeds	5 Speed	
Clutch	Manual	
Shift pattern	1-N-2-3-4-5	
CHASSIS		
Fuel tank capacity (Std)	6.1gal	
Fuel tank capacity (Res)	0.9gal	
Air filter type	Paper	
Countershaft sprocket	17T	
Rear wheel sprocket	43T	
Drive chain	50-110L	
Front Brake	Double Disc	
Rear Brake	Single Disc	
Front tire	120/80V17-V240	
Tire pressure	32PSI	
Rear tire	140/80V17-V240	
Tire pressure	41PSI	
SERVICE/TUNING		
Valve clearance:		
Intake	0.12mm (0.005")	
Exhaust	0.12mm (0.005")	
Ignition type	CDI	
Spark plug gap	0.8-0.9mm (0.031-0.035")	
LUBRICATION		
Recommended fuel	86+ Octane	

(Continued)

MODEL ID PHOTO

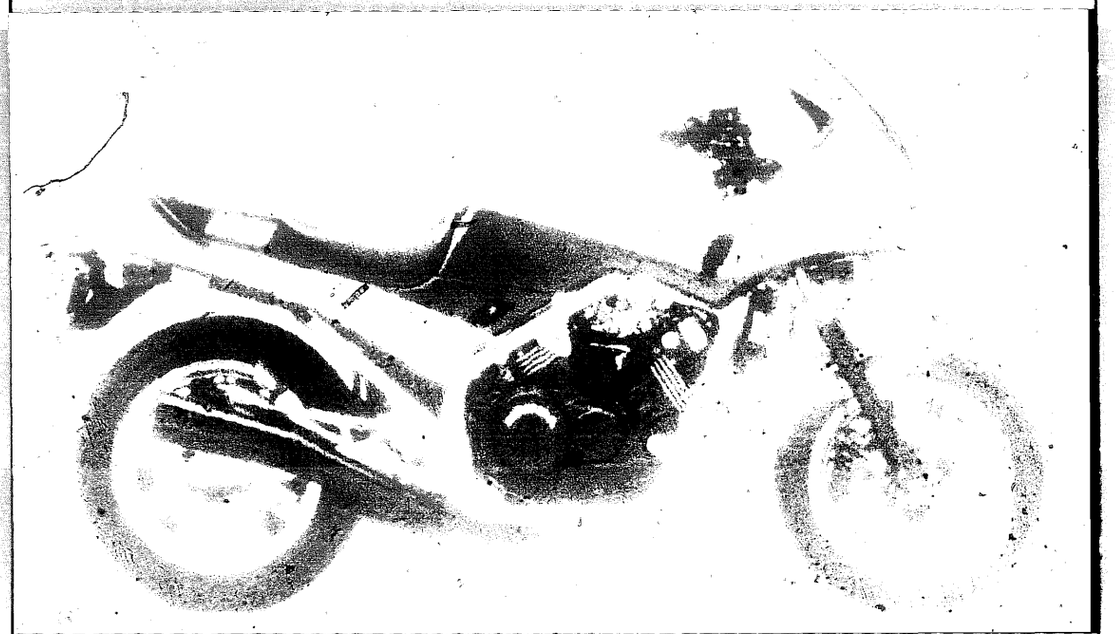

VF1000F'84 1000 INTERCEPTOR

SPECIFICATIONS

SECTION/SUBJECT	VF1000F'84	
LUBRICATION (continued)		
Engine oil - Pro Honda:		
GN4 10W40	P N: 08206-0001	
GN4 20W50	P N: 08206-0002	
Engine oil capacity:		
After draining	3.1qts	
After reassembly	3.7qts	
Coolant type	P N. CUO8730	
Coolant ratio	50:50	
Chain lubricant:		
Pro Honda chain lube	P N 08209-0002	
Fork oil:		
Pro Honda	P N. 08208-0010	
Viscosity	10W	
Capacity after draining	R H-380cc L H-400cc	
Capacity after reassembly	R H-395cc L H-420cc	
Brake fluid - Pro Honda DOT 4	P N: 08203-0004	

BULK HOSE CROSS REFERENCE CHART

To convert a cut hose part number to the equivalent of roll hose simply match the two part numbers using the following chart, cutting the required length indicated by the cut hose part number.

FUEL HOSE

CURRENT CATALOG LISTING	BULK HOSE PART NUMBER
95001-35 2	95001-35003-20M
95001-35 4	95001-35003-40M
95001-45 2	95001-45003-20M
95001-45 4	95001-45008-40M
95001-55 2	95001-55008-20M
95001-55 4	95001-55008-40M
95001-75 4	95001-75008-40M

VACUUM HOSE

CURRENT CATALOG LISTING	BULK HOSE PART NUMBER
95005-35 2	95005-35008
95005-35 3	
95005-35 1	
95005-45 2	95005-45008-10M
95005-45 3	
95005-50 3	95005-50003-30M
95005-55 2	95005-55003-20M
95005-70 3	95005-70003-30M
95005-75 1	95005-75003-10M
95005-75 2	
95005-80 1	95005-80008-10M
95005-80 2	
95005-80 3	
95005-12 2	95005-12003-10M

ORDERING INFORMATION

FUEL HOSE

PART NUMBER	H/C	INSIDE DIAMETER	ROLL LENGTH
95001-35003-20M	2380533	3.5 mm	3M (9.9ft)
95001-35003-40M	2380541	3.5 mm	3M (9.9ft)
95001-45003-20M	2380558	4.5 mm	3M (9.9ft)
95001-45008-30M	2324986	4.5 mm	8M (26.4ft)
95001-55008-20M	2386134	5.3 mm	8M (26.4ft)
95001-55008-30M	2385896	5.3 mm	8M (26.4ft)
95001-75003-20M	2385094	7.5 mm	3M (9.9ft)
95001-75003-30M	2385904	7.5 mm	3M (9.9ft)

VACUUM HOSE

PART NUMBER	H/C	INSIDE DIAMETER	ROLL LENGTH
95005-35008-10M	2325058	3.5 mm	8M (26.4ft)
95005-45008-10M	2325082	4.5 mm	8M (26.4ft)
95005-50003-30M	2380668	5.0 mm	3M (9.9ft)
95005-55008-10M	2386886	5.5 mm	8M (26.4ft)
95005-65003-20M	2380624	6.5 mm	3M (9.9ft)
95005-75003-10M	2380640	7.3 mm	3M (9.9ft)
95005-80008-10M	2325108	8.0 mm	8M (26.4ft)
95005-12003-10M	2380657	12.0 mm	3M (9.9ft)
95005-14003-20M	238[illegible]	14.0 mm	3M (9.9ft)

CAUTION: Damage to vacuum hose will result from contact with fuel. Do not use vacuum hose in place of fuel hose.

CONSTRUCTION OF FUEL AND VACUUM HOSE PART NUMBER

Part Number (Example) 9 5 0 0 1 - 7 5 0 0 8 - 4 0 M

Roll Hose

All Roll hose Part Numbers have an "M" in this position

Appearance Code Key

For Type 1 ONLY Fuel:
- 2: Red, braided exterior
- 4: Gray with red stripe, smooth exterior

For Type 5 ONLY Vacuum:
- 1: Dark gray smooth exterior
- 2: Dark gray, smooth exterior
- 3: Black, smooth exterior

Length

Cut Hose = length is in millimeters (mm)
Bulk Hose = length is in meters (M)

Inside Diameter Code

12 = 12.0mm	55 = 5.3mm or 5.5mm
35 = 3.5mm	70 = 7.0mm
45 = 4.5mm	75 = 7.3mm or 7.5mm
50 = 5.0mm	80 = 8.0mm

Type Code Key

1 = Fuel Hose
5 = Vacuum Hose

CAUTION: Damage to vacuum hose will result from contact with fuel. Do not use vacuum hose in place of fuel hose.

COMMONLY REQUIRED REPLACEMENT PARTS

VF1000F '84 REF NO	DESCRIPTION	AREA CODE	SERIAL NUMBER FROM	SERIAL NUMBER TO	QTY REQ	PART NUMBER	HONDA CODE
	BATTERY ASSY		-------	-------	1	31500-MB6-672	1736412
	BULB, HEADLIGHT (H4 JA12V60/55W)		-------	-------	1	34901-MC7-601	1288612
	BULB, TURN SIGNAL (12V23/8W)		-------	-------	2	34905-425-671	0824326
	BULB, TURN SIGNAL (12V23W)		-------	-------	2	34905-268-671	0145318
	CABLE COMP., CHOKE		-------	-------	1	17950-MB6-000	1748649
	CYLINDER ASSY., FR. BRAKE MASTER		-------	-------	1	45500-MB4-673	1668874
	DISK, CLUTCH FRICTION		-------	-------	9	22201-MB0-003	1242551
	FILTER, OIL		-------	-------	1	15410-MJ0-004	3481355
	FLOAT SET		-------	-------	4	16013-MB0-671	1241751
	FUSE A (10A)		-------	-------	6	98200-11000	0294439
	FUSE A (15A)		-------	-------	4	98200-11500	0216283
	FUSE F (30A)		-------	-------	1	98200-53000	0412676
	GASKET KIT A		-------	-------	1	061A1-MB6-010	1881028
	GASKET KIT B		-------	-------	1	061B1-MB6-000	1799162
	GASKET SET	A	-------	-------	4	16010-MB0-871	3516416
	GASKET SET	AC	-------	-------	4	16010-MB6-681	2076362
	GASKET, EX. PIPE		-------	-------	4	18291-MN4-920	2916997
	GASKET, HEAD COVER		-------	-------	2	12391-MB6-000	1748128
	GRIP, L. HANDLEBAR		-------	-------	1	53166-422-000	0692574
	GRIP, R. HANDLEBAR		-------	-------	1	53165-422-000	0692566
	HEADLIGHT ASSY		-------	-------	1	33100-MB6-671	1749357
	HEADLIGHT UNIT		-------	-------	1	33120-MB0-771	1437144
	KEY SET	A	-------	-------	1	35010-MB6-010	2729796
	KEY SET	AC	-------	-------	1	35010-MB6-741	2151223
	LEVER COMP., L. HANDLEBAR		-------	-------	1	53178-KER-006	1373992
	LEVER COMP., R. HANDLEBAR		-------	-------	1	53175-MJ6-006	1376590
	MIRROR, L.		-------	-------	1	88120-MB6-010	2292571
	MIRROR, R.		-------	-------	1	88110-MB6-010	2280451
	PAD COMP., RR. (ASK) (KIT P/N 431A0-MB4-307)		-------	-------	2	43105-MB4-007	1387745
	PLUG, SPARK (DPR7EA-9 NGK)		-------	-------	(2)	98069-57916	1103076

(Continued)

COMMONLY REQUIRED REPLACEMENT PARTS

(Continued)

VF1000F '84 REF NO	DESCRIPTION	AREA CODE	SERIAL NUMBER FROM	SERIAL NUMBER TO	QTY REQ	PART NUMBER	HONDA CODE
	PLUG, SPARK (DPR8EA-9 NGK)		-------	-------	2	98066-58916	1103084
	PLUG, SPARK (DPR9EA-9 NGK)		-------	-------	(2)	98069-59916	1103092
	PLUG, SPARK (X22EPR-U9 ND)		-------	-------	(2)	98069-57926	1096817
	PLUG, SPARK (X24EPR-U9 ND)		-------	-------	2	98069-58926	1096825
	PLUG, SPARK (X27EPR-U9 ND)		-------	-------	(2)	98069-59926	1096833
	SPROCKET, DRIVE (17T)		-------	-------	1	23801-438-000	1051838
	TIRE ASSY., FR. (BS)		-------	-------	1	44710-MB6-611	2070720
	TIRE ASSY., FR. (DUNLOP)		-------	-------	1	44710-MB6-612	2070738
	TIRE ASSY., RR. (BS)		-------	-------	1	42710-MB6-611	2070464
	TIRE ASSY., RR. (DUNLOP)		-------	-------	1	42710-MB6-612	2070472
	WEIGHT, BALANCE (20G)		-------	-------	N	42705-MB0-000	1247881
	WEIGHT, BALANCE (30G)		-------	-------	N	42706-MB0-000	1247899

CONTENTS BY PAGE NO. SEQUENCE

PAGE TITLE	PAGE	GRID
CYLINDER HEAD COVER	2	1-B 1
CYLINDER HEAD, FR.	3	1-B 1
CYLINDER HEAD, RR	6	1-B 3
CAMSHAFT	8	1-B 4
VALVE	8	1-B 4
CAM CHAIN	10	1-B 5
TENSIONER	10	1-B 5
CRANKCASE COVER, R	12	1-B 6
CLUTCH	13	1-B 6
PULSE GENERATOR	15	1-B 7
STARTER CLUTCH	15	1-B 7
ALTERNATOR	17	1-B 8
CRANKCASE COVER, L	19	1-B 9
WATER PUMP	19	1-B 9
STARTER MOTOR	22	1-B 11
OIL FILTER	23	1-B 11
OIL PAN	23	1-B 11
OIL PUMP	23	1-B 11
CYLINDER BLOCK	26	1-B 12
CRANKSHAFT	28	1-C 2
PISTON	28	1-C 2
TRANSMISSION	32	1-C 4
GEARSHIFT DRUM	34	1-C 5
WATER PIPE	36	1-C 6
THERMOSTAT	36	1-C 6
CARBURETOR (ASSY)	38	1-C 7
CARBURETOR COMPONENTS	40	1-C 8
GASKET KIT A	42	1-C 9
GASKET KIT B	43	1-C 9
HEADLIGHT	46	1-D 1
INSTRUMENTS	48	1-D 2
CONTROL SWITCHES	50	1-D 3
CLUTCH	50	1-D 3
BRAKE MASTER CYL. FR	52	1-D 4
CLUTCH MASTER CYLINDER	54	1-D 5
HANDLEBAR	56	1-D 6
TOP BRIDGE	56	1-D 6
STEERING STEM	58	1-D 7
FENDER, FR.	59	1-D 7
SHOCK ABSORBER, FR.	60	1-D 8
BRAKE CALIPER, FR.	64	1-D 10
WHEEL, FR.	66	1-D 11
BRAKE MASTER CYL, RR.	68	1-D 12
BRAKE CALIPER, RR.	70	1-E 1
WHEEL, RR	72	1-E 2
FUEL TANK	74	1-E 3
SEAT	76	1-E 4
COWL, RR.	76	1-E 4
SIDE COVER	78	1-E 5
BATTERY	78	1-E 5
FUEL PUMP	80	1-E 6
AIR CLEANER	82	1-E 7
MUFFLER, EXHAUST	84	1-E 8
PEDAL, BRAKE	86	1-E 9
PEDAL, GEARSHIFT	86	1-E 9
STEP	87	1-E 9
STAND	89	1-E 10
SWINGARM	90	1-E 11
CHAIN CASE	90	1-E 11
SHOCK ABSORBER, RR	92	1-E 12
FENDER, RR.	94	1-F 1
SPARK UNIT	94	1-F 1
TURN SIGNAL	96	1-F 2
TAILLIGHT	98	1-F 3
WIRE HARNESS	100	1-F 4
IGNITION COIL	100	1-F 4
RADIATOR	102	1-F 5
FRAME BODY	105	1-F 6
TOOLS	108	1-F 8
COWL	109	1-F 8
STRIPE	112	1-F 10
MARK	112	1-F 10
CANISTER (AC)	114	1-F 11

GRID

A-10

CYLINDER HEAD COVER

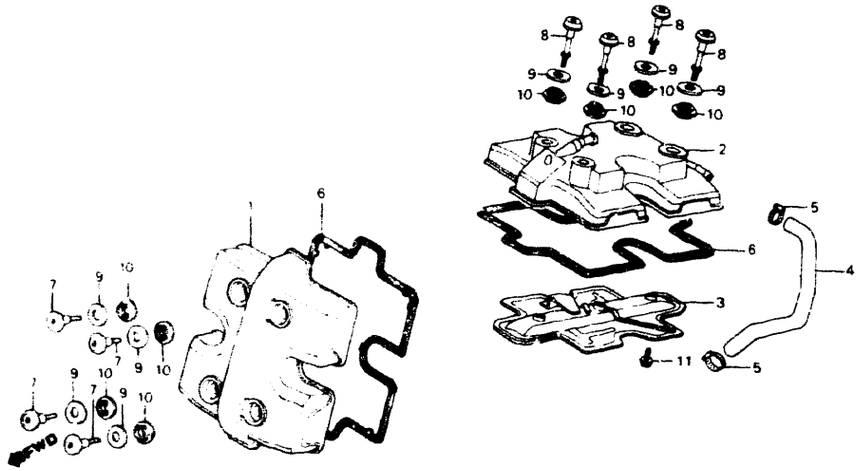

VF1000F '84

G43-BMB6-1

BLOCK NO. E-1

REF NO	DESCRIPTION	AREA CODE	SERIAL NUMBER FROM	TO	QTY REQ	PART NUMBER	HONDA CODE
1	COVER A, CYLINDER HEAD		-------	-------	1	12311-MB6-000	1748078
2	COVER COMP. B, CYLINDER HEAD		-------	-------	1	12321-MB6-000	1748086
3	PLATE, OIL SEPARATE		-------	-------	1	12325-MB6-000	1748094
4	TUBE, BREATHER		-------	-------	1	12326-MB6-000	1748102
	TUBE, BREATHER		-------	-------	1	12326-MB6-020	2959757
5	CLAMP, BREATHER HOSE		-------	-------	2	12327-MB6-000	1748110
6	GASKET, HEAD COVER		-------	-------	2	12391-MB6-000	1748128
7	BOLT, SPECIAL, 6X29		-------	-------	4	90017-MB0-000	1243427
8	BOLT, SPECIAL, 6X58		-------	-------	4	90017-MB6-004	1750249
9	WASHER, MOUNTING RUBBER		-------	-------	8	90541-MB0-000	1243690
10	RUBBER, MOUNTING		-------	-------	8	90542-MB0-000	1243708
11	BOLT, FLANGE, 6X12		-------	-------	3	96000-06012-00	0823666
	BOLT, FLANGE, 6X12		-------	-------	3	96001-06012-00	2105930

SC15E ENGINE NO. 2000043 TO 2009450
SC15E ENGINE NO. 2000060 TO 2010776

CYLINDER HEAD (FRONT)

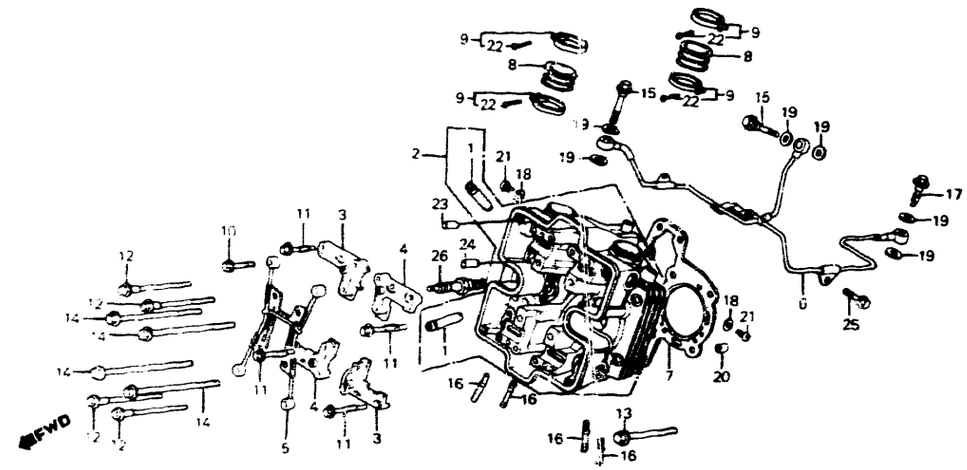

VF1000F '84

G43-BMB6-2

BLOCK NO. E-2

REF NO	DESCRIPTION	AREA CODE	SERIAL NUMBER FROM	TO	QTY REQ	PART NUMBER	HONDA CODE
1	GUIDE, VALVE (OS.)		-------	-------	8	12204-MB0-405	1390087
2	HEAD COMP., FR. CYLINDER		-------	2009920	1	12210-MB6-000	1748029
	HEAD COMP., FR. CYLINDER		-------	-------	1	12210-MB6-010	2032571
	HEAD COMP., FR. CYLINDER		-------	-------	1	12210-MB6-020	2274538
	HEAD COMP., FR. CYLINDER		-------	-------	1	12210-MB6-030	2654051
3	HOLDER A, CAMSHAFT		-------	-------	2	12211-MB6-000	1748037
	HOLDER A, CAMSHAFT		-------	-------	2	12211-MB6-010	2140879
	HOLDER A, CAMSHAFT		-------	-------	2	12211-MB6-020	2326999
4	HOLDER B, CAMSHAFT		-------	-------	2	12212-MB6-000	1752070
	HOLDER B, CAMSHAFT		-------	-------	2	12212-MB6-010	2099380
	HOLDER B, CAMSHAFT		-------	-------	2	12212-MB6-020	2241834
5	PIPE A, OIL PATH		-------	-------	1	12230-MB0-000	1240951
	PIPE A, OIL PATH		-------	-------	1	12230-MB0-010	2016863
6	PIPE B, OIL PATH		-------	-------	1	12240-MB6-000	1748052
7	GASKET, CYLINDER HEAD		-------	-------	1	12251-MB6-000	1748060
	GASKET, CYLINDER HEAD		-------	-------	1	12251-MB6-010	1880301
	GASKET, CYLINDER HEAD		-------	-------	1	12251-MB6-020	2275907
	GASKET, CYLINDER HEAD		-------	-------	1	12251-MB6-030	2396810
8	INSULATOR, CARBURETOR		-------	-------	2	16212-MB6-000	1741503
	INSULATOR, CARBURETOR		-------	-------	2	16212-MB6-010	2333177

CONTENTS

TITLE	GRID
AIR CLEANER	1-E7
ALTERNATOR	1-B8
BATTERY	1-E5
BRAKE CALIPER FR	1-D10
BRAKE CALIPER RR	1-E1
BRAKE MASTER CYL. FR	1-D4
BRAKE MASTER CYL. RR	1-D12
CAM CHAIN	1-B5
CAMSHAFT	1-B4
CANISTER (AC)	1-F11
CARBURETOR (ASSY.)	1-C7
CARBURETOR COMPONENTS	1-C8
CHAIN CASE	1-E11
CLUTCH	1-D3
CLUTCH	1-B6
CLUTCH MASTER CYLINDER	1-D5
CONTROL SWITCHES	1-D3
COWL	1-F8
COWL, RR	1-E4
CRANKCASE COVER, L	1-B9
CRANKCASE COVER, R	1-B6
CRANKSHAFT	1-C2
CYLINDER BLOCK	1-B12
CYLINDER HEAD COVER	1-B1
CYLINDER HEAD FR	1-B1
CYLINDER HEAD RR	1-B3
FENDER, FR	1-D7
FENDER, RR	1-F1
FRAME BODY	1-F6
FUEL PUMP	1-E6
FUEL TANK	1-E3
GASKET KIT A	1-C9
GASKET KIT B	1-C9
GEARSHIFT DRUM	1-C5
HANDLEBAR	1-D6
HEADLIGHT	1-D1
IGNITION COIL	1-F4
INSTRUMENTS	1-D2
MARK	1-F10
MUFFLER, EXHAUST	1-E8
OIL FILTER	1-B11
OIL PAN	1-B11
OIL PUMP	1-B11
PEDAL, BRAKE	1-E9
PEDAL, GEARSHIFT	1-E9
PISTON	1-C2
PULSE GENERATOR	1-B7
RADIATOR	1-F5
SEAT	1-E4
SHOCK ABSORBER, FR	1-D8
SHOCK ABSORBER, RR	1-F12
SIDE COVER	1-E5
SPARK UNIT	1-F1
STAND	1-E10
STARTER CLUTCH	1-B7
STARTER MOTOR	1-B11
STEERING STEM	1-D7
STEP	1-E5
STRIPE	1-F10
SWINGARM	1-E11
TAILLIGHT	1-F3
TENSIONER	1-B5
THERMOSTAT	1-C6
TOOLS	1-F8
TOP BRIDGE	1-D6
TRANSMISSION	1-C4
TURN SIGNAL	1-F2
VALVE	1-B4
WATER PIPE	1-C6
WATER PUMP	1-B9
WHEEL, FR	1-D11
WHEEL, RR	1-E2
WIRE HARNESS	1-F4

GRID NO.

1-B 1

CYLINDER HEAD (FRONT)

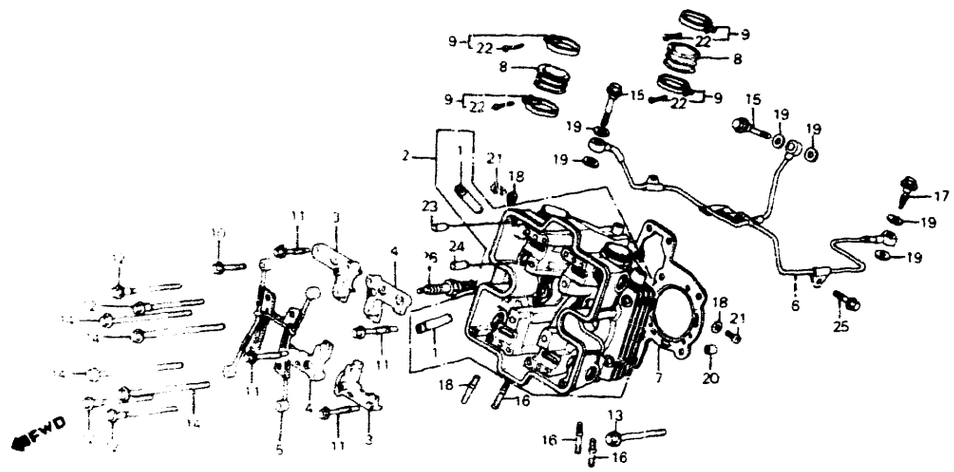

VF1000F 84

G43-BMB6-2 BLOCK NO E-2

REF NO	DESCRIPTION	AREA CODE	SERIAL NUMBER FROM	TO	QTY REQ	PART NUMBER	HONDA CODE
9	BAND INSULATOR		-------	-------	4	16219-MB0-770	1312701
10	BOLT FLANGE 6X52		-------	-------	4	90001-MB0-000	1243336
11	BOLT FLANGE 6X58		-------	-------	4	90003-MB6-000	1755263
12	BOLT UBS 8X151		-------	-------	4	90006-MB0-010	176213[illegible]
13	BOLT UBS 9X91		-------	-------	4	90011-MB0-770	1292085
14	BOLT UBS 9X175		-------	-------	4	90012-MB6-C03	1750231
15	BOLT OIL		-------	-------	2	90025-MB0-771	1316975
16	BOLT STUD 7-6X47		-------	-------	4	90035-MB6-000	1755271
17	BOLT OIL CONTROL		-------	-------	1	90045-MB2-000	1539014
18	WASHER THRUST 5MM		-------	-------	2	90452-323-000	0255224
19	WASHER OIL BOLT		-------	-------	6	90545-300-000	0189902
20	PIN DOWEL 12X24		-------	-------	2	91102-MB6-000	1750330
21	SCREW PAN 5X8		-------	-------	2	93500-05008-0G	0331363
22	SCREW PAN 5X25		-------	-------	4	93500-05025-0G	0477471
23	PIN DOWEL 8X14		-------	-------	4	94301-08140	0069310
24	PIN DOWEL 12X20		-------	-------	4	94301-12200	0165324
25	BOLT FLANGE 6X14		-------	-------	1	96000-06014-07	1390293
	BOLT FLANGE 6X14		-------	-------	1	96001-06014-07	2532729
26	PLUG SPARK (DPR7EA-9 NGK)		-------	-------	(2)	98069-57916	1103076
	PLUG SPARK (X22EPR-U9 ND)		-------	-------	(2)	98069-57926	1096817

SC15E ENGINE NO 2000043 TO 2009450
SC15E ENGINE NO 2000060 TO 2010776

VF1000F 84 BLOCK NO E-2

REF NO	DESCRIPTION	AREA CODE	SERIAL NUMBER FROM	TO	QTY REQ	PART NUMBER	HONDA CODE
26	PLUG SPARK (DPR8EA-9 NGK)		-------	-------	2	98069-58916	1103084
	PLUG SPARK (X24EPR-U9 ND)		-------	-------	2	98069-58926	1096825
	PLUG SPARK (DPR9EA-9 NGK)		-------	-------	(2)	98069-59916	1103092
	PLUG SPARK (X27EPR-U9 ND)		-------	-------	(2)	98069-59926	1096833

CONTENTS

TITLE	GRID
AIR CLEANER	1-E7
ALTERNATOR	1-B8
BATTERY	1-E5
BRAKE CALIPER FR	1-D10
BRAKE CALIPER RR	1-E7
BRAKE MASTER CYL FR	1-D4
BRAKE MASTER CYL RR	1-D12
CAM CHAIN	1-B5
CAM SHAFT	1-B4
CANISTER (AC)	1-F11
CARBURETOR (ASSY)	1-C7
CARBURETOR COMPONENTS	1-C8
CHAIN CASE	1-E11
CLUTCH	1-D3
CLUTCH	1-B6
CLUTCH MASTER CYLINDER	1-D5
CONTROL SWITCHES	1-D3
COWL	1-F8
COWL RR	1-E4
CRANKCASE COVER L	1-B9
CRANKCASE COVER R	1-B6
CRANKSHAFT	1-C2
CYLINDER BLOCK	1-B12
CYLINDER HEAD COVER	1-B1
CYLINDER HEAD FR	1-B1
CYLINDER HEAD RR	1-B3
FENDER FR	1-D7
FENDER RR	1-F1
FRAME BODY	1-F6
FUEL PUMP	1-E6
FUEL TANK	1-E3
GASKET KIT A	1-C9
GASKET KIT B	1-C9
GEARSHIFT DRUM	1-C5
HANDLEBAR	1-D6
HEADLIGHT	1-D1
IGNITION COIL	1-F4
INSTRUMENTS	1-D2
MARK	1-F10
MUFFLER EXHAUST	1-E8
OIL FILTER	1-B11
OIL PAN	1-B11
OIL PUMP	1-B11
PEDAL BRAKE	1-E9
PEDAL GEARSHIFT	1-E9
PISTON	1-C2
PULSE GENERATOR	1-B7
RADIATOR	1-F5
SEAT	1-E4
SHOCK ABSORBER FR	1-D8
SHOCK ABSORBER RR	1-E12
SIDE COVER	1-E5
SPARK UNIT	1-F1
STAND	1-E10
STARTER CLUTCH	1-B7
STARTER MOTOR	1-B11
STEERING STEM	1-D7
STEP	1-E9
STRIPE	1-F10
SWINGARM	1-E11
TAILLIGHT	1-F3
TENSIONER	1-B5
THERMOSTAT	1-C6
TOOLS	1-F8
TOP BRIDGE	1-D6
TRANSMISSION	1-C4
TURN SIGNAL	1-F2
VALVE	1-B4
WATER PIPE	1-C6
WATER PUMP	1-B9
WHEEL FR	1-D11
WHEEL RR	1-E2
WIRE HARNESS	1-F4

GRID NO.

1-B 2

CYLINDER HEAD (REAR)

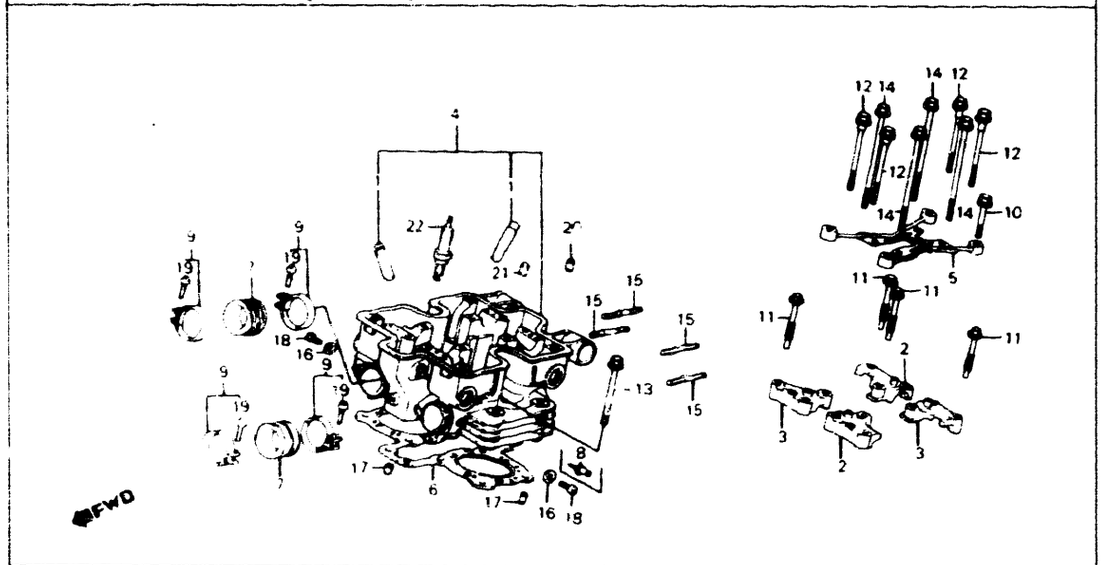

VF1000F 84

G43 8MB6 81

BLOCK NO E-2-1

REF NO	DESCRIPTION	AREA CODE	SERIAL NUMBER FROM	SERIAL NUMBER TO	QTY REQ	PART NUMBER	HONDA CODE
1	GUIDE VALVE (OS)		-------	-------	8	12204-MB0-405	1390087
2	HOLDER A CAMSHAFT		-------	-------	2	12211-MB6-000	1748037
	HOLDER A CAMSHAFT		-------	-------	2	12211-MB6-010	2140879
	HOLDER A CAMSHAFT		-------	-------	2	12211-MB6-020	2326999
3	HOLDER B CAMSHAFT		-------	-------	2	12212-MB6-000	1752070
	HOLDER B CAMSHAFT		-------	-------	2	12212-MB6-010	2099380
	HOLDER B CAMSHAFT		-------	-------	2	12212-MB6-020	2241834
4	HEAD COMP RR CYLINDER		-------	2009920	1	12220-MB6-000	1748045
	HEAD COMP RR CYLINDER		-------	-------	1	12220-MB6-010	2032589
	HEAD COMP RR CYLINDER		-------	-------	1	12220-MB6-020	2274967
	HEAD COMP RR CYLINDER		-------	-------	1	12220-MB6-030	2869600
5	PIPE A OIL PATH		-------	-------	1	12230-MB0-000	1240951
	PIPE A OIL PATH		-------	-------	1	12230-MB0-010	2016863
6	GASKET CYLINDER HEAD		-------	-------	1	12251-MB6-000	1748060
	GASKET CYLINDER HEAD		-------	-------	1	12251-MB6-010	1880301
	GASKET CYLINDER HEAD		-------	-------	1	12251-MB6-020	2275907
	GASKET CYLINDER HEAD		-------	-------	1	12251-MB6-030	2396810
7	INSULATOR CARBURETOR		-------	-------	2	16212-MB6-000	1741503
	INSULATOR CARBURETOR		-------	-------	2	16212-MB6-010	2333177
8	JOINT BOOST	AC	-------	-------	1	16214-MB0-000	1244193

SC15E ENGINE NO 2000043 TO 2009450
SC15E ENGINE NO 2000060 TO 2010776

VF1000F 84

BLOCK NO E-2-1

REF NO	DESCRIPTION	AREA CODE	SERIAL NUMBER FROM	SERIAL NUMBER TO	QTY REQ	PART NUMBER	HONDA CODE
9	BAND INSULATOR		-------	-------	4	16219-MB0-770	1312701
10	BOLT FLANGE 6X52		-------	-------	4	90001-MB0-000	1243336
11	BOLT FLANGE 6X58		-------	-------	4	90003-MB6-000	1755263
12	BOLT UBS 8X151		-------	-------	4	90006-MB0-010	1762137
13	BOLT UBS 9X91		-------	-------	4	90011-MB0-770	1292085
14	BOLT UBS 9X175		-------	-------	4	90012-MB6-003	1750231
15	BOLT STUD 7-6X47		-------	-------	4	90035-MB6-000	1755271
16	WASHER THRUST 5MM		-------	-------	2	90452-323-000	0255224
17	PIN DOWEL 12X24		-------	-------	2	91102-MB6-000	1750330
18	SCREW PAN 5X8	A	-------	-------	2	93500-05008-0G	0331363
		AC	-------	-------	1	93500-05008-0G	0331363
19	SCREW PAN 5X25		-------	-------	4	93500-05025-0G	0477471
20	PIN DOWEL 8X14		-------	-------	4	94301-08140	0069310
21	PIN DOWEL 12X20		-------	-------	4	94301-12200	0165324
22	PLUG SPARK (DPR7EA-9 NGK)		-------	-------	(2)	98069-57916	1103076
	PLUG SPARK (X22EPR-U9 ND)		-------	-------	(2)	98069-57926	1096817
	PLUG SPARK (DPR8EA-9 NGK)		-------	-------	4	98069-58916	1103084
	PLUG SPARK (X24EPR-U9 ND)		-------	-------	2	98069-58926	1096825
	PLUG SPARK (DPR9EA-9 NGK)		-------	-------	(2)	98069-59916	1103092
	PLUG SPARK (X27EPR-U9 ND)		-------	-------	(2)	98069-59926	1096833

CONTENTS

TITLE	GRID
AIR CLEANER	1-E7
ALTERNATOR	1-B8
BATTERY	1-E5
BRAKE CALIPER FR	1-D10
BRAKE CALIPER RR	1-E1
BRAKE MASTER CYL FR	1-D4
BRAKE MASTER CYL RR	1-D12
CAM CHAIN	1-B5
CAMSHAFT	1-B4
CANISTER (AC)	1-F11
CARBURETOR (ASSY)	1-C7
CARBURETOR COMPONENTS	1-C8
CHAIN CASE	1-E11
CLUTCH	1-D3
CLUTCH	1-B6
CLUTCH MASTER CYLINDER	1-D5
CONTROL SWITCHES	1-D3
COWL	1-F8
COWL RR	1-E4
CRANKCASE COVER L	1-B9
CRANKCASE COVER R	1-B6
CRANKSHAFT	1-C2
CYLINDER BLOCK	1-B12
CYLINDER HEAD COVER	1-B1
CYLINDER HEAD FR	1-B1
CYLINDER HEAD RR	1-B3
FENDER FR	1-D7
FENDER RR	1-F1
FRAME BODY	1-F6
FUEL PUMP	1-E6
FUEL TANK	1-E3
GASKET KIT A	1-C9
GASKET KIT B	1-C9
GEARSHIFT DRUM	1-C5
HANDLEBAR	1-D6
HEADLIGHT	1-D1
IGNITION COIL	1-F4
INSTRUMENTS	1-D2
MARK	1-F10
MUFFLER EXHAUST	1-E8
OIL FILTER	1-B11
OIL PAN	1-B11
OIL PUMP	1-B11
PEDAL BRAKE	1-E9
PEDAL GEARSHIFT	1-E9
PISTON	1-C2
PULSE GENERATOR	1-B7
RADIATOR	1-F5
SEAT	1-E4
SHOCK ABSORBER FR	1-D8
SHOCK ABSORBER RR	1-E12
SIDE COVER	1-E5
SPARK UNIT	1-F1
STAND	1-E10
STARTER CLUTCH	1-B7
STARTER MOTOR	1-B11
STEERING STEM	1-D7
STEP	1-E9
STRIPE	1-F10
SWINGARM	1-E11
TAILLIGHT	1-F3
TENSIONER	1-B5
THERMOSTAT	1-C6
TOOLS	1-F8
TOP BRIDGE	1-D6
TRANSMISSION	1-C4
TURN SIGNAL	1-F2
VALVE	1-B4
WATER PIPE	1-C6
WATER PUMP	1-B9
WHEEL FR	1-D11
WHEEL RR	1-E2
WIRE HARNESS	1-F4

GRID NO.

1-B 3

CAMSHAFT • VALVE

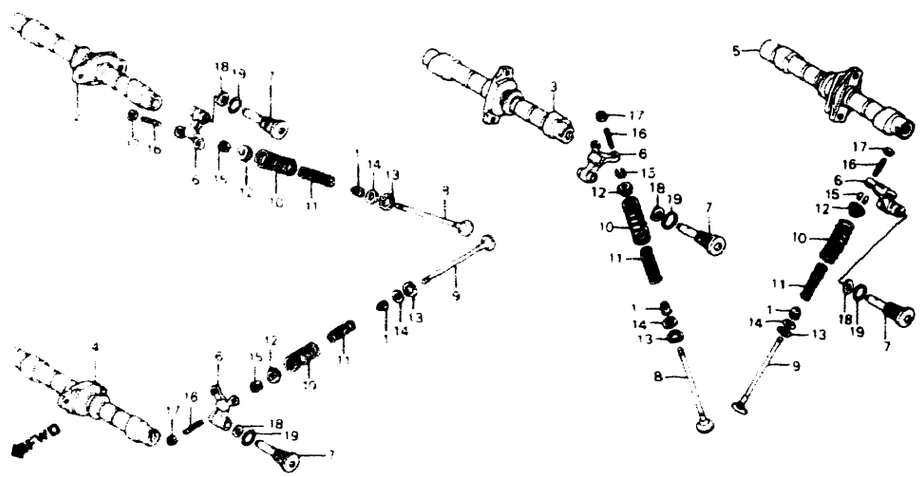

VF1000F 84

G43 8MB0 4

BLOCK NO. E-3

REF NO	DESCRIPTION	AREA CODE	SERIAL NUMBER FROM	SERIAL NUMBER TO	QTY REQ	PART NUMBER	HONDA CODE
1	SEAL VALVE STEM		-------	-------	16	12209-422-005	0688887
2	CAMSHAFT COMP FR IN		-------	-------	1	14111-MB6-000	1748243
	CAMSHAFT COMP FR IN		-------	-------	1	14111-MB6-010	2088797
	CAMSHAFT COMP FR IN		-------	-------	1	14111-MB6-306	2421105
3	CAMSHAFT COMP RR IN		-------	-------	1	14121-MB6-000	1748250
	CAMSHAFT COMP RR IN		-------	-------	1	14121-MB6-010	2088805
	CAMSHAFT COMP RR IN		-------	-------	1	14121-MB6-306	2951333
4	CAMSHAFT COMP FR EX		-------	-------	1	14131-MB6-000	1748268
	CAMSHAFT COMP FR EX		-------	-------	1	14131-MB6-010	2088813
	CAMSHAFT COMP FR EX		-------	-------	1	14131-MB6-306	2576825
5	CAMSHAFT COMP RR EX		-------	-------	1	14141-MB6-000	1748276
	CAMSHAFT COMP RR EX		-------	-------	1	14141-MB6-010	2086783
	CAMSHAFT COMP RR EX		-------	-------	1	14141-MB6-306	2421113
6	ARM VALVE ROCKER		-------	-------	8	14611-MB6-010	2426872
7	SHAFT VALVE ROCKER ARM		-------	-------	8	14631-KE8-000	1289271
8	VALVE IN		-------	-------	8	14711-MB6-000	1741339
9	VALVE EX		-------	-------	8	14721-MB6-000	1748383
10	SPRING VALVE OUTER		-------	-------	16	14751-MB6-003	1752443
11	SPRING VALVE INNER		-------	-------	16	14761-MB6-003	1752450
12	RETAINER VALVE SPRING		-------	-------	16	14771-MB6-000	1741347

SC15E ENGINE NO 2000043 TO 2009450
SC15E ENGINE NO 2000060 TO 2010776

VF1000F 84

BLOCK NO. E-3

REF NO	DESCRIPTION	AREA CODE	SERIAL NUMBER FROM	SERIAL NUMBER TO	QTY REQ	PART NUMBER	HONDA CODE
13	SEAT, VALVE SPRING		-------	-------	16	14775-422-000	0689018
14	SEAT, VALVE SPRING INNER		-------	-------	16	14776-MB0-770	1289420
15	COTTER, VALVE		-------	-------	32	14781-MB4-000	1416932
16	SCREW, TAPPET ADJUSTING		-------	-------	16	90002-MB1-870	1724319
17	NUT, TAPPET ADJUSTING		-------	-------	16	90206-590-000	0347815
18	WASHER, WAVE, 12MM		-------	-------	8	90402-428-000	0684878
19	O-RING, 21 5X2		-------	-------	8	91310-KE8-003	1425602

CONTENTS

TITLE	GRID
AIR CLEANER	1-E7
ALTERNATOR	1-B8
BATTERY	1-E5
BRAKE CALIPER FR	1-D10
BRAKE CALIPER RR	1-E1
BRAKE MASTER CYL FR	1-D4
BRAKE MASTER CYL RR	1-D12
CAM CHAIN	1-B5
CAMSHAFT	1-B4
CANISTER (AC)	1-E11
CARBURETOR (ASSY.)	1-C7
CARBURETOR COMPONENTS	1-C8
CHAIN CASE	1-E11
CLUTCH	1-D3
CLUTCH	1-B6
CLUTCH MASTER CYLINDER	1-D5
CONTROL SWITCHES	1-D3
COIL	1-F8
COIL RR	1-E4
CRANKCASE COVER L	1-B9
CRANKCASE COVER R	1-B6
CRANKSHAFT	1-C2
CYLINDER BLOCK	1-B12
CYLINDER HEAD COVER	1-B1
CYLINDER HEAD FR	1-B1
CYLINDER HEAD RR	1-B3
FENDER FR	1-D7
FENDER RR	1-F1
FRAME BODY	1-F6
FUEL PUMP	1-E6
FUEL TANK	1-E3
GASKET KIT A	1-C9
GASKET KIT B	1-C9
GEARSHIFT DRUM	1-C5
HANDLEBAR	1-D6
HEADLIGHT	1-D1
IGNITION COIL	1-F4
INSTRUMENTS	1-D2
MARK	1-F10
MUFFLER EXHAUST	1-E8
OIL FILTER	1-B11
OIL PAN	1-B11
OIL PUMP	1-B11
PEDAL BRAKE	1-E9
PEDAL GEARSHIFT	1-E9
PISTON	1-C2
PULSE GENERATOR	1-B7
RADIATOR	1-F5
SEAT	1-E4
SHOCK ABSORBER FR	1-D8
SHOCK ABSORBER RR	1-E12
SIDE COVER	1-E5
SPARK UNIT	1-F1
STAND	1-E10
STARTER CLUTCH	1-B7
STARTER MOTOR	1-B11
STEERING STEM	1-D7
STEP	1-E9
STRIPE	1-F10
SWINGARM	1-E11
TAILLIGHT	1-F3
TENSIONER	1-B5
THERMOSTAT	1-C6
TOOLS	1-F8
TOP BRIDGE	1-D6
TRANSMISSION	1-C4
TURN SIGNAL	1-F2
VALVE	1-B4
WATER PIPE	1-C6
WATER PUMP	1-B9
WHEEL FR	1-D11
WHEEL RR	1-E2
WIRE HARNESS	1-F4

GRID NO.

1-B 4

CAM CHAIN • TENSIONER

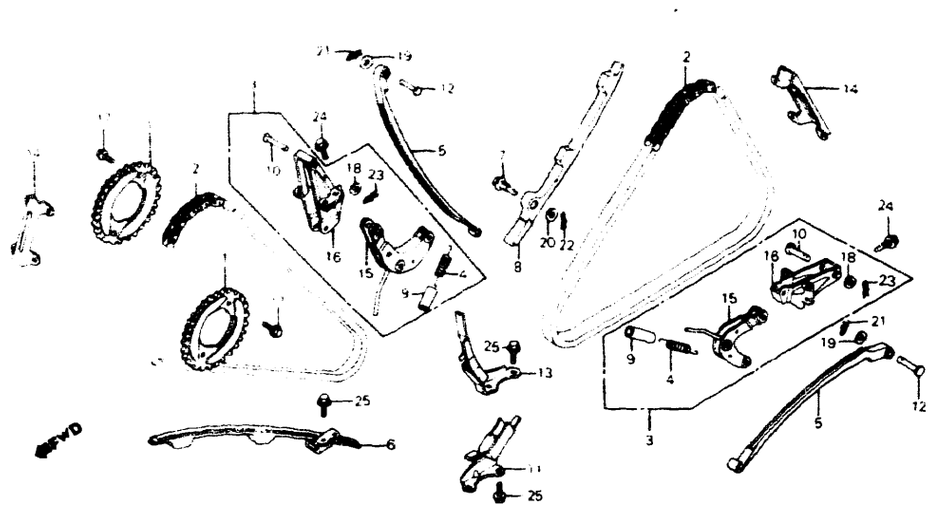

VF1000F 84

G43-BMB6-4

BLOCK NO E-4

REF NO	DESCRIPTION	AREA CODE	SERIAL NUMBER FROM	SERIAL NUMBER TO	QTY REQ	PART NUMBER	HONDA CODE
1	SPROCKET, CAM		-------	-------	4	14321-MB6-000	1748284
2	CHAIN, CAM		-------	-------	2	14401-MB6-003	1776715
3	BRACKET ASSY., CAM CHAIN TENSIONER		-------	-------	2	14510-MB6-000	1748300
	BRACKET ASSY., CAM CHAIN TENSIONER		-------	-------	2	14510-MB6-010	2011195
	BRACKET ASSY., CAM CHAIN TENSIONER		-------	-------	2	14510-MB6-0[illegible]	2140945
4	SPRING, TENSIONER		-------	-------	2	14514-MB6-00[illegible]	[illegible]806645
5	TENSIONER, CAM CHAIN		-------	-------	2	14515-MB6-[illegible]0	1748326
	TENSIONER, CAM CHAIN		-------	-------	2	14515-MF[illegible]	[illegible]521193
6	GUIDE COMP., A, CAM CHAIN		-------	-------	1	14520-MB6-000	1748334
7	BOLT, CAM CHAIN GUIDE A		-------	-------	1	14521-MB0-000	1241496
8	GUIDE A, CAM CHAIN		-------	-------	1	14522-MB6-300	1752377
9	TUBE, TENSIONER SPRING		-------	-------	2	14525-MB0-010	1707785
10	PIN, 8X43.2		-------	-------	2	14526-MB0-000	1241520
11	HOLDER COMP., A, CAM CHAIN TENSIONER		-------	-------	1	14530-MB6-000	1748342
12	PIN A, TENSIONER ARM		-------	-------	2	14533-MB0-000	1241546

SC15E ENGINE NO 2000043 TO 2009450
SC15E ENGINE NO 2000060 TO 2010776

VF1000F 84

BLOCK NO E-4

REF NO	DESCRIPTION	AREA CODE	SERIAL NUMBER FROM	SERIAL NUMBER TO	QTY REQ	PART NUMBER	HONDA CODE
13	HOLDER COMP., B, CAM CHAIN TENSIONER		-------	-------	1	14540-MB6-000	1748359
14	GUIDE B, CAM CHAIN		-------	-------	2	14541-MB6-000	1748367
15	ARM COMP., CAM CHAIN TENSIONER		-------	-------	2	14550-MB6-000	1748375
16	BRACKET COMP., CAM CHAIN TENSIONER HOLDER		-------	-------	2	14560-MB6-000	1708064
17	BOLT, FLANGE KNOCK, 7X12		-------	-------	8	90081-426-000	1007830
18	WASHER, 8MM		-------	-------	2	90405-463-000	0886168
19	WASHER, 6MM		2003277	-------	2	90485-KE8-000	1768571
	WASHER, 6MM		-------	2003276	2	90485-286-000	0155077
0	WASHER, 7MM		-------	-------	1	90486-MB0-000	1243658
21	PIN, SPECIAL LOCK, 6MM		-------	-------	2	90704-MB0-000	1243740
22	PIN, LOCK, 6MM		-------	-------	1	94251-06000	0058487
23	PIN, LOCK, 8MM		-------	-------	2	94251-08000	0115527
24	BOLT, FLANGE, 6X16		-------	-------	8	95700-06016-00	0496653
	BOLT, FLANGE, 6X16		-------	-------	8	95701-06016-00	2410892
25	BOLT, FLANGE, 6X1[illegible]		-------	-------	6	96000-06014-00	0782854
	BOLT, FLANGE, 6X40		-------	-------	6	96001-06014-00	2154672

CONTENTS

TITLE	GRID
AIR CLEANER	1-E7
ALTERNATOR	1-B8
BATTERY	1-E5
BRAKE CALIPER, FR	1-D10
BRAKE CALIPER, RR	1-E1
BRAKE MASTER CYL., FR	1-D4
BRAKE MASTER CYL., RR	1-D12
CAM CHAIN	1-B5
CAMSHAFT	1-B4
CANISTER (AC)	1-F11
CARBURETOR (ASSY.)	1-C7
CARBURETOR COMPONENTS	1-C8
CHAIN CASE	1-E11
CLUTCH	1-D3
CLUTCH	1-B6
CLUTCH MASTER CYLINDER	1-D5
CONTROL SWITCHES	1-D3
COWL	1-F8
COWL, RR	1-E4
CRANKCASE COVER, L	1-B9
CRANKCASE COVER, R	1-B6
CRANKSHAFT	1-C2
CYLINDER BLOCK	1-B12
CYLINDER HEAD COVER	1-B1
CYLINDER HEAD, FR	1-B1
CYLINDER HEAD, RR	1-B3
FENDER, FR	1-D7
FENDER, RR	1-F1
FRAME BODY	1-F6
FUEL PUMP	1-E6
FUEL TANK	1-E3
GASKET KIT A	1-C5
GASKET KIT B	1-C9
GEARSHIFT DRUM	1-C5
HANDLEBAR	1-D6
HEADLIGHT	1-D1
IGNITION COIL	1-F4
INSTRUMENTS	1-D2
MARK	1-F10
MUFFLER, EXHAUST	1-E8
OIL FILTER	1-B11
OIL PAN	1-B11
OIL PUMP	1-B11
PEDAL, BRAKE	1-E9
PEDAL, GEARSHIFT	1-E9
PISTON	1-C2
PULSE GENERATOR	1-B7
RADIATOR	1-F5
SEAT	1-E4
SHOCK ABSORBER, FR	1-D8
SHOCK ABSORBER, RR	1-E12
SIDE COVER	1-E5
SPARK UNIT	1-F1
STAND	1-E10
STARTER CLUTCH	1-B7
STARTER MOTOR	1-B11
STEERING STEM	1-D7
STEP	1-E9
STRIPE	1-F10
SWINGARM	1-E11
TAILLIGHT	1-F3
TENSIONER	1-B5
THERMOSTAT	1-C6
TOOLS	1-F8
TOP BRIDGE	1-D6
TRANSMISSION	1-C4
TURN SIGNAL	1-F2
VALVE	1-B4
WATER PIPE	1-C8
WATER PUMP	1-B9
WHEEL, FR	1-D11
WHEEL, RR	1-E2
WIRE HARNESS	1-F4

GRID NO.

RIGHT CRANKCASE COVER

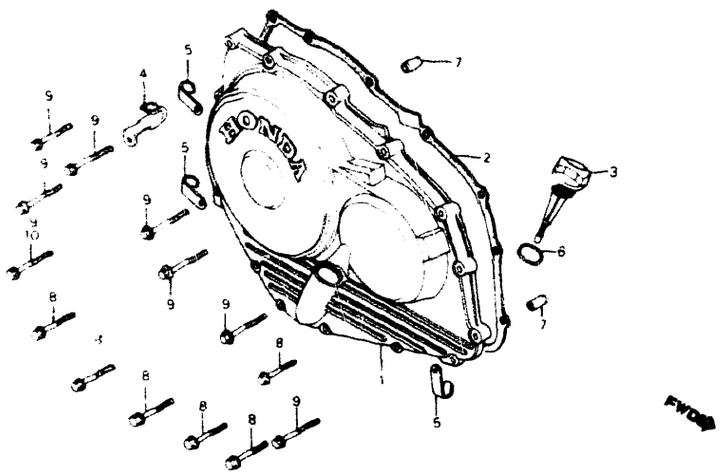

VF1000F '84

G43-BMB6-5 BLOCK NO. E-5

REF NO	DESCRIPTION	AREA CODE	SERIAL NUMBER FROM	SERIAL NUMBER TO	QTY REQ	PART NUMBER	HONDA CODE
1	COVER ASSY., R		-------	-------	1	11330-MB6-000	1799170
	COVER, R		-------	2005130	1	11331-MB6-000	1747997
2	GASKET, R. COVER		-------	-------	1	11394-MB0-000	1240860
3	GAUGE, OIL LEVEL		-------	-------	1	15650-MB2-000	1427087
4	CLAMP, PULSER WIRE		-------	-------	1	30301-MB0-000	1243070
5	CLAMP, SWITCH WIRE		-------	-------	3	35211-443-760	1390160
6	O-RING, 21.5X3.2		-------	-------	1	91307-425-003	1216126
7	PIN, DOWEL, 8X14		-------	-------	2	94301-08140	0069310
8	BOLT, FLANGE, 6X28		-------	-------	6	96000-06028-07	0807339
	BOLT, FLANGE, 6X28		-------	-------	6	96001-06028-07	2106011
9	BOLT, FLANGE, 6X32		-------	2005130	7	96000-06032-07	1292242
			2005131	-------	8	96000-06032-07	1292242
	BOLT, FLANGE, 6X32		-------	2005130	7	96001-06032-07	2458750
			2005131	-------	8	96001-06032-07	2458750
10	BOLT, FLANGE, 6X35		-------	2005130	1	96000-06035-07	0807362
	BOLT, FLANGE, 6X35		-------	2005130	1	96001-06035-07	2533891

SC15E ENGINE NO 2000043 TO 2009450
SC15E ENGINE NO 2000060 TO 2010776

CLUTCH

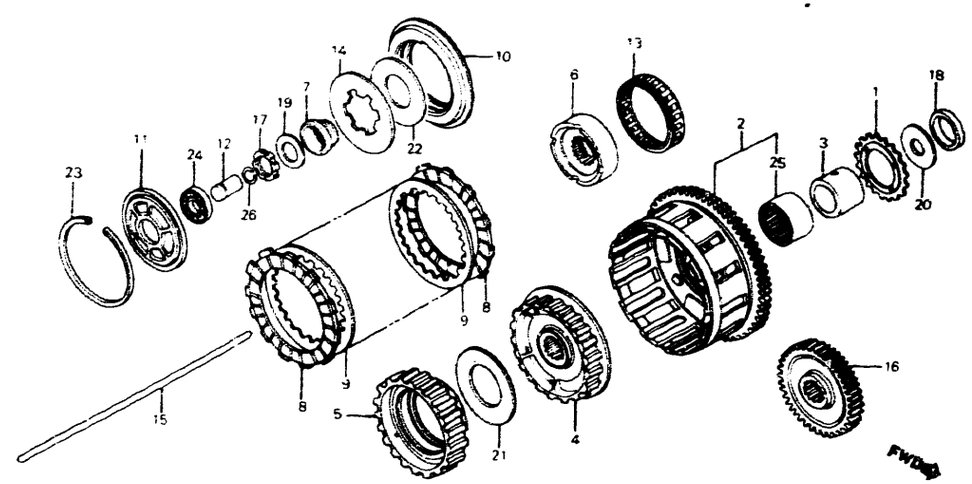

VF1000F '84

G43-BMB6-6 BLOCK NO. E-6

REF NO	DESCRIPTION	AREA CODE	SERIAL NUMBER FROM	SERIAL NUMBER TO	QTY REQ	PART NUMBER	HONDA CODE
1	SPROCKET COMP., OIL PUMP DRIVEN		-------	-------	1	15131-MB6-000	1741354
2	OUTER COMP., CLUTCH		-------	2001362	1	22100-MB6-003	1749035
	OUTER COMP., CLUTCH		-------	-------	1	22100-MB6-013	1806751
3	GUIDE, CLUTCH OUTER		-------	-------	1	22116-MB4-000	1387018
4	CENTER A, CLUTCH		-------	-------	1	22120-MB6-003	1749043
5	CENTER B, CLUTCH		-------	-------	1	22131-MB6-000	1749050
6	INNER, ONE WAY CLUTCH		-------	-------	1	22141-MB6-000	1753334
7	PLATE, SPRING SETTING		-------	-------	1	22151-MB6-000	1753342
8	DISK, CLUTCH FRICTION		-------	-------	9	22201-MB0-003	1242551
9	PLATE B, CLUTCH		-------	-------	8	22321-283-000	0075705
10	PLATE, CLUTCH PRESSURE		-------	-------	1	22351-MB0-771	1536077
11	PLATE, CLUTCH LIFTER		-------	-------	1	22352-MB0-770	1291095
12	PIECE, CLUTCH JOINT		-------	-------	1	22366-MB6-000	1753367
13	CLUTCH, ONE WAY		-------	-------	1	22425-MB4-003	1385681
14	SPRING, CLUTCH		-------	-------	1	22441-MB4-003	1387067
15	ROD, CLUTCH LIFTER		-------	-------	1	22850-MB6-000	1753383
16	GEAR, PRIMARY DRIVE (35T)		-------	-------	1	23103-MB6-000	1753441
17	NUT, LOCK, 25MM		-------	-------	1	90050-MB6-000	1755289
18	COLLAR, 30.2X8.2		-------	-------	1	90203-MB6-000	1750306

CONTENTS

TITLE	GRID
AIR CLEANER	1-E7
ALTERNATOR	1-B8
BATTERY	1-E5
BRAKE CALIPER, FR	1-D10
BRAKE CALIPER, RR	1-E1
BRAKE MASTER CYL., FR	1-D4
BRAKE MASTER CYL., RR	1-D12
CAM CHAIN	1-B5
CAMSHAFT	1-B4
CANISTER (AC)	1-F11
CARBURETOR (ASSY.)	1-C7
CARBURETOR COMPONENTS	1-C8
CHAIN CASE	1-E11
CLUTCH	1-D3
CLUTCH	1-B6
CLUTCH MASTER CYLINDER	1-D5
CONTROL SWITCHES	1-D3
COWL	1-F8
COWL, RR	1-E4
CRANKCASE COVER, L	1-B9
CRANKCASE COVER, R	1-B6
CRANKSHAFT	1-C2
CYLINDER BLOCK	1-B12
CYLINDER HEAD COVER	1-B1
CYLINDER HEAD, FR	1-B1
CYLINDER HEAD, RR	1-B3
FENDER, FR	1-E7
FENDER, RR	1-F1
FRAME BODY	1-F6
FUEL PUMP	1-E6
FUEL TANK	1-E3
GASKET KIT A	1-C9
GASKET KIT B	1-C9
GEARSHIFT DRUM	1-C5
HANDLEBAR	1-D6
HEADLIGHT	1-D1
IGNITION COIL	1-F4
INSTRUMENTS	1-D2
MARK	1-F10
MUFFLER, EXHAUST	1-E8
OIL FILTER	1-B11
OIL PAN	1-B11
OIL PUMP	1-B11
PEDAL, BRAKE	1-E9
PEDAL, GEARSHIFT	1-E9
PISTON	1-C2
PULSE GENERATOR	1-B7
RADIATOR	1-F5
SEAT	1-E4
SHOCK ABSORBER, FR	1-D8
SHOCK ABSORBER, RR	1-E12
SIDE COVER	1-E5
SPARK UNIT	1-F1
STAND	1-E10
STARTER CLUTCH	1-B7
STARTER MOTOR	1-B11
STEERING STEM	1-D7
STEP	1-E9
STRIPE	1-F10
SWINGARM	1-E11
TAILLIGHT	1-F3
TENSIONER	1-B5
THERMOSTAT	1-C6
TOOLS	1-F8
TOP BRIDGE	1-D6
TRANSMISSION	1-C4
TURN SIGNAL	1-F2
VALVE	1-B4
WATER PIPE	1-C6
WATER PUMP	1-B9
WHEEL, FR	1-D11
WHEEL, RR	1-E2
WIRE HARNESS	1-F4

GRID NO.

CLUTCH

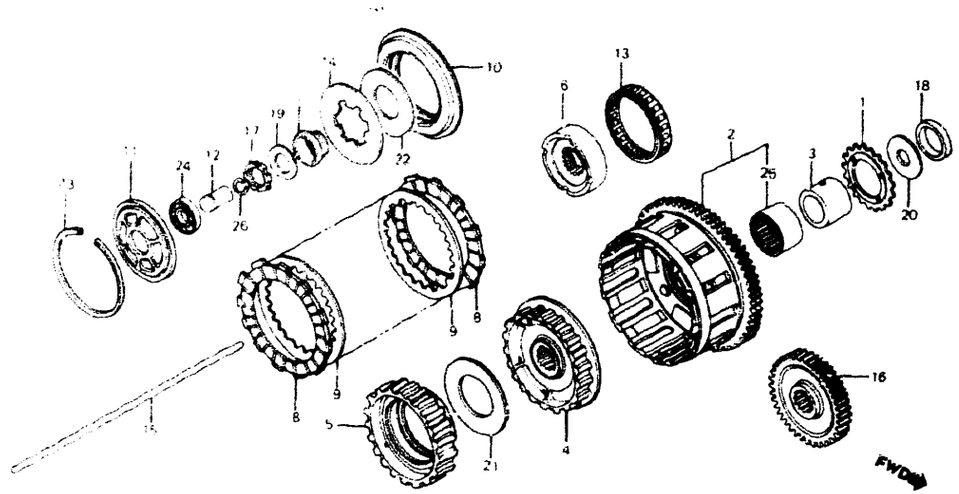

VF1000F '84

G43-BMB6-6

BLOCK NO. E-6

REF NO	DESCRIPTION	AREA CODE	SERIAL NUMBER FROM	SERIAL NUMBER TO	QTY REQ	PART NUMBER	HONDA CODE
19	WASHER, SPRING, 25MM		-------	-------	1	90434-422-000	0689844
20	WASHER, THRUST, 30MM		-------	-------	1	90459-MB4-000	1388642
21	WASHER, 44X85X1.6		-------	-------	1	90461-MJ0-000	1722891
22	WASHER, 48X78X3.2		-------	-------	1	90462-MB6-000	1755388
23	CIRCLIP, INTERNAL, 95		-------	-------	1	90601-MB0-771	1536549
24	BEARING, RADIAL BALL, 16003		-------	-------	1	91008-362-000	0334854
25	BEARING, NEEDLE, 40X47X31		-------	-------	1	91024-MB4-000	1388909
26	CLIP, PISTON PIN, 15MM		-------	-------	1	94601-15000	0156018

1-B 7

SC15E ENGINE NO. 2000043 TO 2009450
SC15E ENGINE NO. 2000060 TO 2010776

PULSE GENERATOR • STARTER CLUTCH

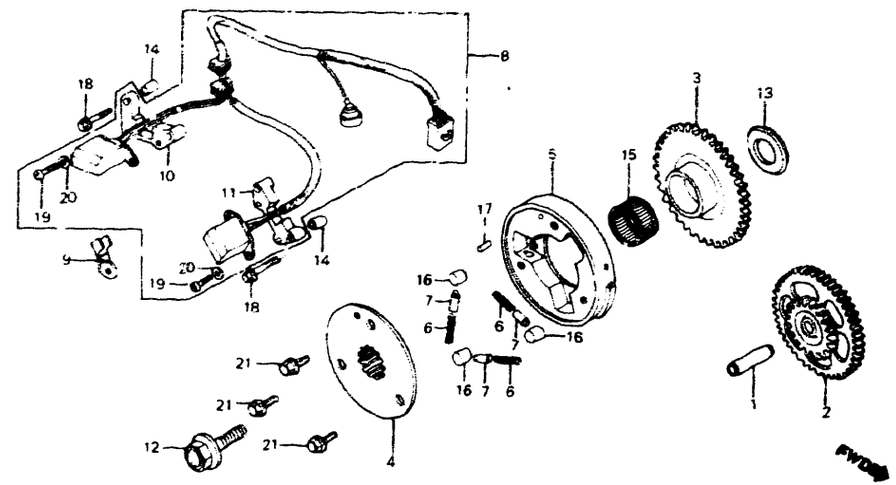

VF1000F '84

G43-BMB6-7

BLOCK NO. E-7

REF NO	DESCRIPTION	AREA CODE	SERIAL NUMBER FROM	SERIAL NUMBER TO	QTY REQ	PART NUMBER	HONDA CODE
1	PIN, PISTON		-------	-------	1	13111-GK8-000	1709104
	PIN, PISTON 10X33		-------	-------	1	13111-122-000	0360024
2	GEAR, STARTER REDUCTION		-------	-------	1	28101-MB6-000	1749175
3	GEAR COMP., STARTER CLUTCH		-------	2009849	1	28110-MB6-000	1749183
	GEAR COMP., STARTER CLUTCH		2009850	-------	1	28110-MB6-010	2032720
4	FLANGE, STARTER CLUTCH		-------	2009849	1	28115-MB6-000	1749191
	FLANGE, STARTER CLUTCH		2009850	-------	1	28115-MB6-010	2032738
5	OUTER COMP., STARTER CLUTCH		-------	-------	1	28120-MB6-000	1749209
6	SPRING, STARTER CLUTCH ROLLER		-------	-------	3	28125-516-030	0192708
7	CAP, STARTER CLUTCH ROLLER						
	SPRING		-------	-------	3	28126-415-000	1243054
8	GENERATOR ASSY., PULSE (TOYO)		-------	-------	1	30300-MB0-154	1243062
	GENERATOR ASSY., PULSE (TOYO)		-------	-------	1	30300-MB0-174	1974831
9	CLIP, PULSER CORD		-------	-------	1	30301-MB6-000	53789
10	STAY A, PULSE GENERATOR (TOYO)		-------	-------	1	30310-MB0-154	1243088
11	STAY B, PULSE GENERATOR (TOYO)		-------	-------	1	30320-MB0-154	1243096
12	BOLT, FLANGE, 12X40		-------	-------	1	90017-MB4-000	1388719
13	WASHER, THRUST		-------	-------	1	90510-107-720	1243682
14	PIN, DOWEL, 8X8		-------	-------	4	90702-MB0-000	1243724
15	BEARING, NEEDLE, 30X35X20		-------	-------	1	91022-MB6-003	1750322

CONTENTS

TITLE	GRID
AIR CLEANER	1-F7
ALTERNATOR	1-B8
BATTERY	1-E5
BRAKE CALIPER, FR	1-D10
BRAKE CALIPER, RR	1-E1
BRAKE MASTER CYL., FR	1-D4
BRAKE MASTER CYL., RR	1-D12
CAM CHAIN	1-B5
CAMSHAFT	1-B4
CANISTER (AC)	1-F11
CARBURETOR (ASSY.)	1-C7
CARBURETOR COMPONENTS	1-C8
CHAIN CASE	1-E11
CLUTCH	1-D3
CLUTCH	1-B6
CLUTCH MASTER CYLINDER	1-J5
CONTROL SWITCHES	1-D3
COWL	1-F8
COWL, RR	1-E4
CRANKCASE COVER, L	1-B9
CRANKCASE COVER, R	1-B6
CRANKSHAFT	1-C2
CYLINDER BLOCK	1-B12
CYLINDER HEAD COVER	1-B1
CYLINDER HEAD, FR	1-B1
CYLINDER HEAD, RR	1-B3
FENDER, FR	1-D7
FENDER, RR	1-F1
FRAME BODY	1-F6
FUEL PUMP	1-E6
FUEL TANK	1-E3
GASKET KIT A	1-C9
GASKET KIT B	1-C9
GEARSHIFT DRUM	1-C5
HANDLEBAR	1-D6
HEADLIGHT	1-D1
IGNITION COIL	1-F4
INSTRUMENTS	1-D2
MARK	1-F10
MUFFLER, EXHAUST	1-E8
OIL FILTER	1-B11
OIL PAN	1-B11
OIL PUMP	1-B11
PEDAL, BRAKE	1-E9
PEDAL, GEARSHIFT	1-E9
PISTON	1-C2
PULSE GENERATOR	1-B7
RADIATOR	1-F5
SEAT	1-E4
SHOCK ABSORBER, FR	1-D8
SHOCK ABSORBER, RR	1-E12
SIDE COVER	1-E5
SPARK UNIT	1-F1
STAND	1-E10
STARTER CLUTCH	1-B7
STARTER MOTOR	1-B11
STEERING STEM	1-D7
STEP	1-E9
STRIPE	1-F10
SWINGARM	1-E11
TAILLIGHT	1-F3
TENSIONER	1-B5
THERMOSTAT	1-C6
TOOLS	1-F8
TOP BRIDGE	1-D6
TRANSMISSION	1-C4
TURN SIGNAL	1-F2
VALVE	1-B4
WATER PIPE	1-C6
WATER PUMP	1-B9
WHEEL, FR	1-D11
WHEEL, RR	1-E2
WIRE HARNESS	1-F4

GRID NO.

1-B 7

PULSE GENERATOR • STARTER CLUTCH

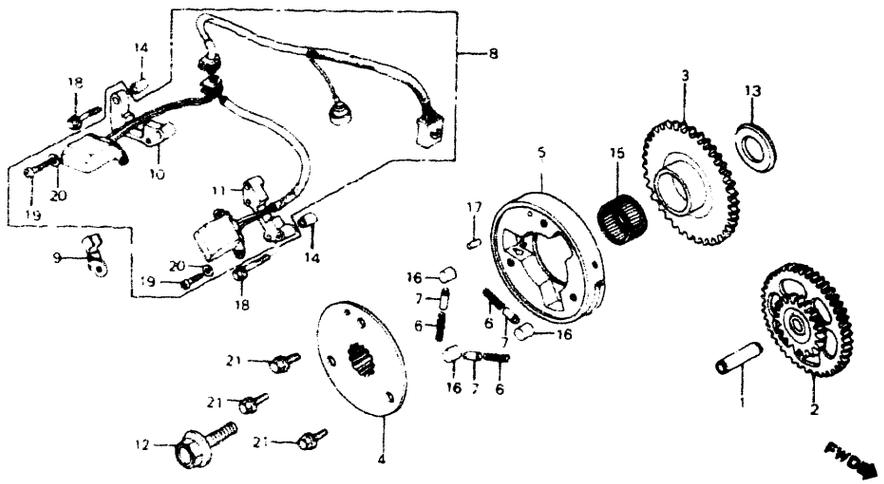

VF1000F 84

G43-BMB6-7

BLOCK NO. E-7

REF NO	DESCRIPTION	CODE	SERIAL NUMBER FROM	SERIAL NUMBER TO	QTY REQ	PART NUMBER	HONDA CODE
16	ROLLER, 15X16				3	91101-422-000	0691097
17	ROLLER, 6X18				1	91103-MB6-000	1750348
18	BOLT-WASHER, 6X25				4	93401-06025-00	2866879
	BOLT-WASHER, 6X25				4	93491-06025-00	0843441
19	SCREW, PAN, 4X10				4	93500-04010-0H	0262964
20	WASHER, SPRING, 4MM				4	94111-04800	0346114
21	BOLT, FLANGE, 8X16				3	95700-08016-08	0347641
	BOLT, FLANGE, 8X16				3	95701-08016-08	2374767
	BOLT, FLANGE, 8X16				3	95900-08016-08	2048544
	BOLT, FLANGE, 8X16				3	95900-08016-08	1591312
	BOLT, FLANGE, 8X16				3	96500-08016-08	2138279

SC15E ENGINE NO 2000043 TO 2009450
SC15E ENGINE NO 2000060 TO 2010776

ALTERNATOR

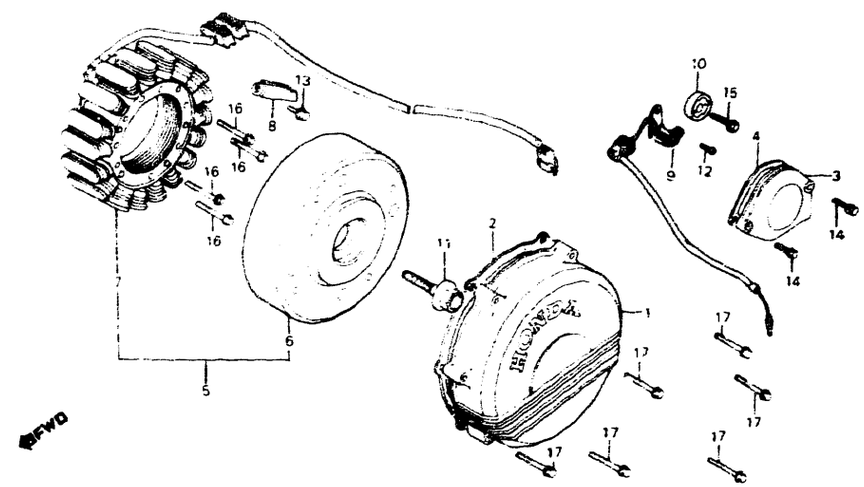

VF1000F 84

G43-BMB6-8

BLOCK NO. E-8

REF NO	DESCRIPTION	CODE	SERIAL NUMBER FROM	SERIAL NUMBER TO	QTY REQ	PART NUMBER	HONDA CODE
1	COVER, ALTERNATOR				1	11631-MB6-000	1748003
2	GASKET, ALTERNATOR COVER				1	11636-MB0-000	1240886
3	COVER, INDICATOR SWITCH				1	11641-MB2-000	1426352
4	GASKET, INDICATOR SWITCH COVER				1	11642-MB0-000	1240902
5	ALTERNATOR ASSY.				1	31100-MB6-000	1753847
	ALTERNATOR ASSY.				1	31100-MB6-008	1761899
	ALTERNATOR ASSY.				1	31100-MB6-014	1963263
6	ROTOR COMP. (ND)				1	31110-MB6-000	1753854
	ROTOR COMP. (MITSUBA)				1	31110-MB6-004	1757400
	ROTOR COMP. (ND)				1	31110-MB6-008	1761907
7	STATOR COMP. (ND)				1	31120-MB6-000	1753870
	STATOR COMP. (ND)				1	31120-MB6-004	1757418
	STATOR COMP. (ND)				1	31120-MB6-008	1761915
	STATOR COMP. (ND)				1	31120-MB6-014	2089084
8	CLAMP, ALTERNATOR WIRE				1	31130-MB6-000	1749258
9	SWITCH ASSY., NEUTRAL				1	35610-MB2-003	1439223
10	ROTOR, NEUTRAL SWITCH			2010311	1	35753-MB2-000	1429125
	ROTOR, NEUTRAL SWITCH				1	35753-MB2-010	1853878
11	BOLT, FLANGE, 12X40				1	90017-MB4-000	1388719
12	SCREW, PAN, 6X12				2	93500-06012-0A	0182360

CONTENTS

TITLE	GRID
AIR CLEANER	1-E7
ALTERNATOR	1-B8
BATTERY	1-E5
BRAKE CALIPER, FR	1-D10
BRAKE CALIPER, RR	1-E1
BRAKE MASTER CYL. FR	1-D4
BRAKE MASTER CYL. RR	1-D12
CAM CHAIN	1-B5
CAMSHAFT	1-B4
CANISTER (AC)	1-F11
CARBURETOR (ASSY.)	1-C7
CARBURETOR COMPONENTS	1-C8
CHAIN CASE	1-E11
CLUTCH	1-D3
CLUTCH	1-B6
CLUTCH MASTER CYLINDER	1-D5
CONTROL SWITCHES	1-D3
COWL	1-F8
COWL, RR	1-E4
CRANKCASE COVER, L	1-B9
CRANKCASE COVER, R	1-B6
CRANKSHAFT	1-C2
CYLINDER BLOCK	1-B12
CYLINDER HEAD COVER	1-B1
CYLINDER HEAD, FR	1-B1
CYLINDER HEAD, RR	1-B3
FENDER, FR	1-D7
FENDER, RR	1-F1
FRAME BODY	1-F6
FUEL PUMP	1-E6
FUEL TANK	1-E3
GASKET KIT A	1-C9
GASKET KIT B	1-C9
GEARSHIFT DRUM	1-C5
HANDLEBAR	1-D6
HEADLIGHT	1-D1
IGNITION COIL	1-F4
INSTRUMENTS	1-D2
MARK	1-F10
MUFFLER, EXHAUST	1-E8
OIL FILTER	1-B11
OIL PAN	1-B11
OIL PUMP	1-B11
PEDAL, BRAKE	1-E9
PEDAL, GEARSHIFT	1-E9
PISTON	1-C2
PULSE GENERATOR	1-B7
RADIATOR	1-F5
SEAT	1-E4
SHOCK ABSORBER, FR	1-D8
SHOCK ABSORBER, RR	1-E12
SIDE COVER	1-E5
SPARK UNIT	1-F1
STAND	1-E10
STARTER CLUTCH	1-B7
STARTER MOTOR	1-B11
STEERING STEM	1-D7
STEP	1-E9
STRIPE	1-F10
SWINGARM	1-E11
TAILLIGHT	1-F3
TENSIONER	1-B5
THERMOSTAT	1-C6
TOOLS	1-F8
TOP BRIDGE	1-D6
TRANSMISSION	1-C4
TURN SIGNAL	1-F2
VALVE	1-B4
WATER PIPE	1-C6
WATER PUMP	1-B9
WHEEL, FR	1-D11
WHEEL, RR	1-E2
WIRE HARNESS	1-F4

GRID NO.

1-B 8

ALTERNATOR

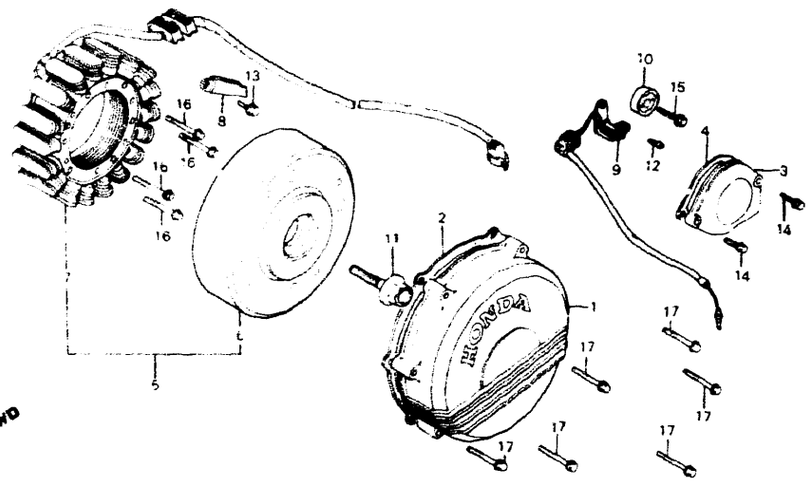

VF1000F 84

G43-BMB6-8

BLOCK NO. E-8

REF NO	DESCRIPTION	AREA CODE	SERIAL NUMBER FROM	SERIAL NUMBER TO	QTY REQ	PART NUMBER	HONDA CODE
13	BOLT, FLANGE, 6X12		-------	-------	1	96000-06012-00	0823666
	BOLT, FLANGE, 6X12		-------	-------	1	96001-06012-00	2105930
14	BOLT, FLANGE, 6X18		-------	-------	2	96000-06018-07	1435106
	BOLT, FLANGE, 6X18		-------	-------	2	96001-06018-07	2737757
15	BOLT, FLANGE, 6X20		-------	-------	1	96000-06020-00	0913806
	BOLT, FLANGE, 6X20		-------	-------	1	96001-06020-00	2529154
16	BOLT, FLANGE, 6X35		-------	-------	4	96000-06035-00	0799080
	BOLT, FLANGE, 6X35		-------	-------	4	96001-06035-00	2112209
17	BOLT, FLANGE, 6X35		-------	-------	6	96000-06035-07	0807362
	BOLT, FLANGE, 6X35		-------	-------	6	96001-06035-07	2533891

SC15E ENGINE NO. 2000043 TO 2009450
SC15E ENGINE NO. 2000060 TO 2010776

LEFT CRANKCASE COVER • WATER PUMP

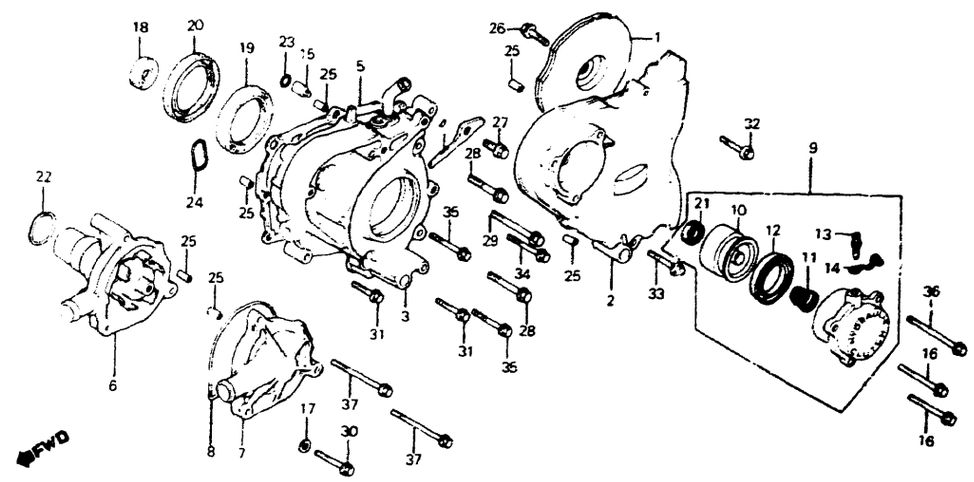

VF1000F 84

G43-BMB6-9

BLOCK NO. E-9

REF NO	DESCRIPTION	AREA CODE	SERIAL NUMBER FROM	SERIAL NUMBER TO	QTY REQ	PART NUMBER	HONDA CODE
1	PLATE COMP., L. COVER		-------	-------	1	11350-MB6-000	1752021
2	COVER, L. CRANKCASE		-------	-------	1	11651-MB6-000	1748011
3	COVER COMP., L. INNER		-------	-------	1	11661-MB6-000	1752054
4	GUIDE, DRIVE CHAIN		-------	-------	1	11663-MB2-000	1426386
5	GASKET, L. INNER COVER		-------	-------	1	11666-MB2-000	1426394
6	PUMP COMP., WATER		-------	-------	1	19200-MB6-000	1748862
	PUMP COMP., WATER		-------	-------	1	19200-MB6-020	1983261
7	COVER, WATER PUMP		-------	-------	1	19221-MB6-000	1748888
8	GASKET, WATER PUMP COVER		-------	-------	1	19226-MB6-000	1748896
9	CYLINDER ASSY., CLUTCH SLAVE		-------	-------	1	22860-MB6-003	1753409
10	PISTON, SLAVE CYLINDER		-------	-------	1	22863-MG9-003	1524669
11	SPRING, SLAVE CYLINDER		-------	-------	1	22864-MB0-003	1242635
12	CUP		-------	-------	1	22865-MG9-003	1524677
13	SCREW, BLEEDER		-------	-------	1	43352-568-003	0505735
14	CAP, BLEEDER		-------	-------	1	43353-461-771	0954230
15	ORIFICE, OIL CONTROL		-------	-------	1	90049-MB0-000	1243484
16	BOLT, FLANGE, 6X55		-------	-------	2	90051-MB2-000	1431113
17	WASHER, 11MM		-------	-------	1	90425-300-000	0189795
18	OIL SEAL, 8X25X8		-------	-------	1	91204-MB0-003	1331099
	OIL SEAL, 8X25X8		-------	-------	1	91204-MB0-013	2952943

CONTENTS

TITLE	GRID
AIR CLEANER	1-E7
ALTERNATOR	1-B8
BATTERY	1-E5
BRAKE CALIPER, FR	1-D10
BRAKE CALIPER, RR	1-E1
BRAKE MASTER CYL. FR	1-D4
BRAKE MASTER CYL. RR	1-D12
CAM CHAIN	1-B5
CAMSHAFT	1-B4
CANISTER (AC)	1-F11
CARBURETOR (ASSY.)	1-C7
CARBURETOR COMPONENTS	1-C8
CHAIN CASE	1-E11
CLUTCH	1-D3
CLUTCH	1-B6
CLUTCH MASTER CYLINDER	1-D5
CONTROL SWITCHES	1-D3
COWL	1-F8
COWL, RR	1-E4
CRANKCASE COVER, L	1-B9
CRANKCASE COVER, R	1-B6
CRANKSHAFT	1-C2
CYLINDER BLOCK	1-B12
CYLINDER HEAD COVER	1-B1
CYLINDER HEAD, FR	1-B1
CYLINDER HEAD, RR	1-B3
FENDER, FR	1-D7
FENDER, RR	1-F1
FRAME BODY	1-F6
FUEL PUMP	1-E8
FUEL TANK	1-E3
GASKET KIT A	1-C9
GASKET KIT B	1-C9
GEARSHIFT DRUM	1-C5
HANDLEBAR	1-D6
HEADLIGHT	1-D1
IGNITION COIL	1-F4
INSTRUMENTS	1-D2
MARK	1-F10
MUFFLER, EXHAUST	1-E8
OIL FILTER	1-B11
OIL PAN	1-B11
OIL PUMP	1-B11
PEDAL, BRAKE	1-E9
PEDAL, GEARSHIFT	1-E9
PISTON	1-C2
PULSE GENERATOR	1-B7
RADIATOR	1-F5
SEAT	1-E4
SHOCK ABSORBER, FR	1-D8
SHOCK ABSORBER, RR	1-E12
SIDE COVER	1-E5
SPARK UNIT	1-F1
STAND	1-E10
STARTER CLUTCH	1-B7
STARTER MOTOR	1-B11
STEERING STEM	1-D7
STEP	1-E9
STRIPE	1-F10
SWINGARM	1-E11
TAILLIGHT	1-F3
TENSIONER	1-B5
THERMOSTAT	1-C6
TOOLS	1-F8
TOP BRIDGE	1-D6
TRANSMISSION	1-C4
TURN SIGNAL	1-F2
VALVE	1-B4
WATER PIPE	1-C6
WATER PUMP	1-B9
WHEEL, FR	1-D11
WHEEL, RR	1-E2
WIRE HARNESS	1-F4

GRID NO.

LEFT CRANKCASE COVER • WATER PUMP

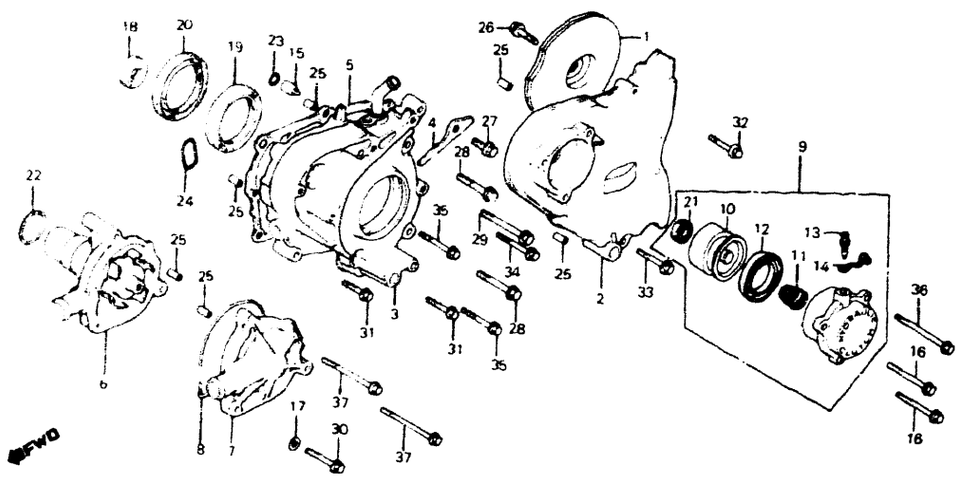

VF1000F '84

G43-8M86-9

BLOCK NO. E-9

REF NO	DESCRIPTION	AREA CODE	SERIAL NUMBER FROM	SERIAL NUMBER TO	QTY REQ	PART NUMBER	HONDA CODE
19	OIL SEAL, 40X58X9		-------	-------	1	91206-MB2-000	1477769
	OIL SEAL, 40X58X9		-------	-------	1	91206-MB2-003	1431360
	OIL SEAL, 40X58X9		-------	-------	1	91206-MB2-004	1708569
20	OIL SEAL, 40X62X6		-------	-------	1	91207-MB2-003	1431378
	OIL SEAL, 40X62X6		-------	-------	1	91207-MB2-004	1477777
21	OIL SEAL, 8X18X5		-------	-------	1	91209-MB0-003	1243872
22	O-RING, 32 95X2 62		-------	-------	1	91302-MB0-013	1435114
23	O-RING, 10 6X20 6X2 5 (ARAI)		-------	-------	1	91303-MB2-003	1431402
	O-RING, 10 6X20 6X2 5 (NIPPON)		-------	-------	1	91303-MB2-004	1494939
24	O-RING, 5 7X2 2 (ARAI)		-------	-------	1	91308-MB0-003	1260835
25	PIN, DOWEL, 8X14		-------	-------	6	94301-08140	0069310
26	BOLT, FLANGE, 6X10		-------	-------	1	95700-06010-00	0350488
	BOLT, FLANGE, 6X10		-------	-------	1	95701-06010-00	2410876
27	BOLT, FLANGE, 8X20		-------	-------	1	95700-08020-00	0477463
	BOLT, FLANGE, 8X20		-------	-------	1	95701-08020-00	2552552
28	BOLT, FLANGE, 8X35		-------	-------	2	95700-08035-08	0673442
	BOLT, FLANGE, 8X35		-------	-------	2	95701-08035-08	2563260
29	BOLT, FLANGE, 8X70		-------	-------	1	95700-08068-08	0252361
	BOLT, FLANGE, 8X70		-------	-------	1	95700-08070-08	0525519
30	BOLT, FLANGE, 6X25		-------	-------	1	96000-06025-07	1251941

SC15E ENGINE NO 2000043 TO 2009450
SC15E ENGINE NO 2000060 TO 2010776

VF1000F '84

BLOCK NO. E-9

REF NO	DESCRIPTION	AREA CODE	SERIAL NUMBER FROM	SERIAL NUMBER TO	QTY REQ	PART NUMBER	HONDA CODE
31	BOLT, FLANGE, 6X28		-------	-------	2	96000-06028-00	0799072
	BOLT, FLANGE, 6X28		-------	-------	2	96001-06028-00	2106003
32	BOLT, FLANGE, 6X32		-------	-------	1	96000-06032-07	1292242
	BOLT, FLANGE, 6X32		-------	-------	1	96001-06032-07	2458750
33	BOLT, FLANGE, 6X35		-------	-------	1	96000-06035-07	0807362
	BOLT, FLANGE, 6X35		-------	-------	1	96001-06035-07	2533891
34	BOLT, FLANGE, 6X40		-------	-------	1	96000-06040-00	0782870
	BOLT, FLANGE, 6X40		-------	-------	1	96001-06040-00	2106037
35	BOLT, FLANGE, 6X45		-------	-------	2	96000-06045-00	0807370
	BOLT, FLANGE, 6X45		-------	-------	2	96001-06045-00	2106045
36	BOLT, FLANGE, 6X60		-------	-------	1	96000-06060-07	1244003
	BOLT, FLANGE, 6X60		-------	-------	1	96001-06060-07	2831659
37	BOLT, FLANGE, 6X70		-------	-------	2	96000-06070-07	1292259
	BOLT, FLANGE, 6X70		-------	-------	2	96001-06070-07	2479673

CONTENTS

TITLE	GRID
AIR CLEANER	1-E7
ALTERNATOR	1-B8
BATTERY	1-E5
BRAKE CALIPER, FR	1-D10
BRAKE CALIPER, RR	1-E1
BRAKE MASTER CYL, FR	1-D4
BRAKE MASTER CYL, RR	1-D12
CAM CHAIN	1-B5
CAMSHAFT	1-B4
CANISTER (AC)	1-F11
CARBURETOR (ASSY.)	1-C7
CARBURETOR COMPONENTS	1-C8
CHAIN CASE	1-E11
CLUTCH	1-D3
CLUTCH	1-B6
CLUTCH MASTER CYLINDER	1-D5
CONTROL SWITCHES	1-D3
COWL	1-F8
COWL, RR	1-E4
CRANKCASE COVER, L	1-B9
CRANKCASE COVER, R	1-B6
CRANKSHAFT	1-C2
CYLINDER BLOCK	1-B12
CYLINDER HEAD COVER	1-B1
CYLINDER HEAD, FR	1-B1
CYLINDER HEAD, RR	1-B3
FENDER, FR	1-D7
FENDER, RR	1-F1
FRAME BODY	1-F6
FUEL PUMP	1-E6
FUEL TANK	1-E3
GASKET KIT A	1-C9
GASKET KIT B	1-C9
GEARSHIFT DRUM	1-C5
HANDLEBAR	1-D6
HEADLIGHT	1-D1
IGNITION COIL	1-F4
INSTRUMENTS	1-D2
MARK	1-F10
MUFFLER, EXHAUST	1-E8
OIL FILTER	1-B11
OIL PAN	1-B11
OIL PUMP	1-B11
PEDAL, BRAKE	1-E9
PEDAL, GEARSHIFT	1-E9
PISTON	1-C2
PULSE GENERATOR	1-B7
RADIATOR	1-F5
SEAT	1-E4
SHOCK ABSORBER, FR	1-D8
SHOCK ABSORBER, RR	1-E12
SIDE COVER	1-E5
SPARK UNIT	1-F1
STAND	1-E10
STARTER CLUTCH	1-B7
STARTER MOTOR	1-B11
STEERING STEM	1-D7
STEP	1-E9
STRIPE	1-F10
SWINGARM	1-E11
TAILLIGHT	1-F3
TENSIONER	1-B5
THERMOSTAT	1-C6
TOOLS	1-F8
TOP BRIDGE	1-D6
TRANSMISSION	1-C4
TURN SIGNAL	1-F2
VALVE	1-B4
WATER PIPE	1-C6
WATER PUMP	1-B9
WHEEL, FR	1-D11
WHEEL, RR	1-E2
WIRE HARNESS	1-F4

GRID NO.

STARTER MOTOR

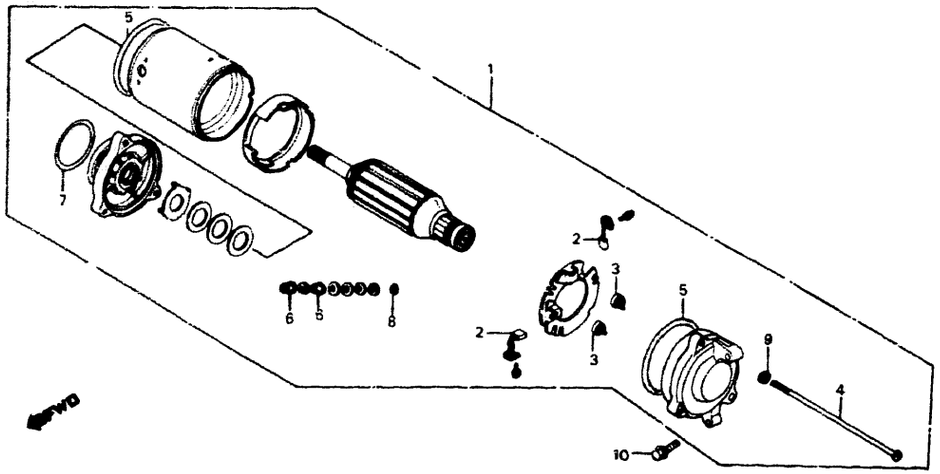

VF1000F'84

G43-BMB6-10

BLOCK NO. E-10

REF NO	DESCRIPTION	AREA CODE	SERIAL NUMBER FROM	SERIAL NUMBER TO	QTY REQ	PART NUMBER	HONDA CODE
1	MOTOR ASSY., STARTER		-------	-------	1	31200-MB6-008	1749266
2	BRUSH, CARBON		-------	-------	2	31201-MG9-004	1525179
3	SPRING, CARBON BRUSH		-------	-------	2	31204-292-158	0151373
4	BOLT, SETTING		-------	-------	3	31205-MB6-000	1749274
5	O-RING, 60X1.4		-------	-------	2	31206-402-008	0414235
6	NUT-WASHER, 6MM		-------	-------	2	90071-MB0-000	1243534
7	O-RING		-------	-------	1	91309-MA6-000	1243922
8	O-RING		-------	-------	1	91320-MB0-000	1292184
9	WASHER, SPRING, 5MM		-------	-------	3	94111-05000	0058966
10	BOLT, FLANGE, 6X25		-------	-------	2	96000-06025-00	0782862
	BOLT, FLANGE, 6X25		-------	-------	2	96001-06025-00	2105989

SC15E ENGINE NO.: 2000043 TO 2009450
SC15E ENGINE NO.: 2000060 TO 2010776

OIL FILTER • OIL PAN • OIL PUMP

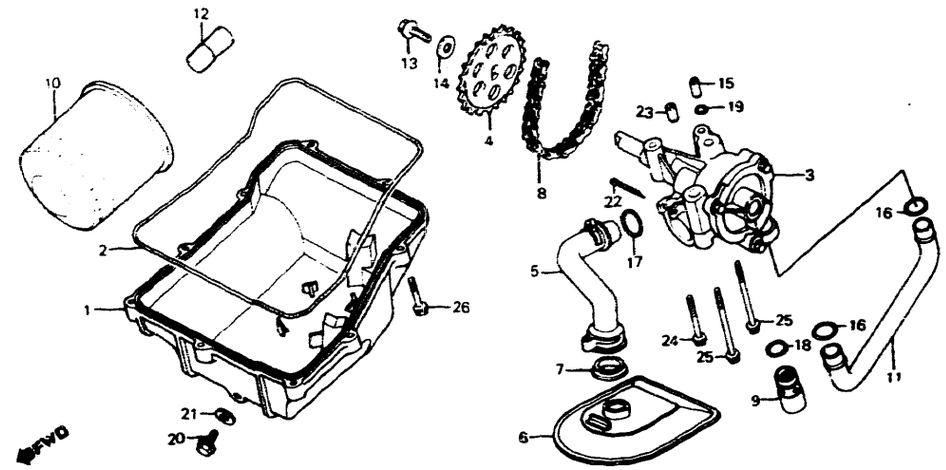

VF1000F'84

G43-BMB6-11

BLOCK NO. E-11

REF NO	DESCRIPTION	AREA CODE	SERIAL NUMBER FROM	SERIAL NUMBER TO	QTY REQ	PART NUMBER	HONDA CODE
1	PAN, OIL		-------	-------	1	11210-MB6-000	1752005
2	GASKET, OIL PAN		-------	-------	1	11315-MB0-010	1441724
3	PUMP ASSY., OIL		-------	-------	1	15100-MB6-000	1746391
4	SPROCKET, OIL PUMP DRIVEN		-------	-------	1	15134-MB6-000	1752438
5	PIPE, OIL STRAINER		-------	-------	1	15151-MB6-000	1752476
6	STRAINER, OIL		-------	-------	1	15153-MB6-000	1752484
7	GASKET, OIL STRAINER		-------	-------	1	15154-425-000	0716191
8	CHAIN, OIL PUMP		-------	-------	1	15161-ME5-003	1326651
9	VALVE ASSY., RELIEF		-------	-------	1	15220-MB0-010	1416064
10	FILTER, OIL		-------	-------	1	15410-MJ0-003	1689611
	FILTER, OIL		-------	-------	1	15410-MJ0-004	3481355
11	PIPE, OIL		-------	-------	1	15511-MB0-000	1241710
12	BOSS, OIL FILTER		-------	-------	1	90019-MB0-000	1243435
13	BOLT, HEX., 6X16		-------	-------	1	90021-KE8-000	1768290
14	WASHER, 6X2.3		-------	-------	1	90488-MB0-000	1243674
15	PIN, KNOCK, 8X14		-------	-------	1	90701-MB4-000	1385509
16	O-RING, 14.6X3.7 (ARAI)		-------	-------	2	91309-MB0-003	1260843
17	O-RING, 18.5X2.4 (ARAI)		-------	-------	1	91311-MB0-003	1260850
18	O-RING, 14.7X2.2		-------	-------	1	91313-MB0-003	1260868
	O-RING, 14.7X2.2		-------	-------	1	91313-MG7-004	3353620

CONTENTS

TITLE	GRID
AIR CLEANER	1-E7
ALTERNATOR	1-B6
BATTERY	1-E5
BRAKE CALIPER, FR	1-D10
BRAKE CALIPER, RR	1-E1
BRAKE MASTER CYL, FR	1-D4
BRAKE MASTER CYL, RR	1-D12
CAM CHAIN	1-B5
CAMSHAFT	1-B4
CANISTER (AC)	1-F11
CARBURETOR (ASSY.)	1-C7
CARBURETOR COMPONENTS	1-C8
CHAIN CASE	1-E11
CLUTCH	1-D3
CLUTCH	1-B6
CLUTCH MASTER CYLINDER	1-D5
CONTROL SWITCHES	1-D3
COWL	1-F8
COWL, RR	1-E4
CRANKCASE COVER, L	1-B9
CRANKCASE COVER, R	1-B6
CRANKSHAFT	1-C2
CYLINDER BLOCK	1-B12
CYLINDER HEAD COVER	1-B1
CYLINDER HEAD, FR	1-B1
CYLINDER HEAD, RR	1-B3
FENDER, FR	1-D7
FENDER, RR	1-F1
FRAME BODY	1-F6
FUEL PUMP	1-E6
FUEL TANK	1-E3
GASKET KIT A	1-C9
GASKET KIT B	1-C9
GEARSHIFT DRUM	1-C5
HANDLEBAR	1-D6
HEADLIGHT	1-D1
IGNITION COIL	1-F4
INSTRUMENTS	1-D2
[illegible]	1-F10
MUFFLER, EXHAUST	1-E8
OIL FILTER	1-B11
OIL PAN	1-B11
OIL PUMP	1-B11
PEDAL, BRAKE	1-E9
PEDAL, GEARSHIFT	1-E9
PISTON	1-C2
PULSE GENERATOR	1-B7
RADIATOR	1-F5
SEAT	1-E4
SHOCK ABSORBER, FR	1-D8
SHOCK ABSORBER, RR	1-E12
SIDE COVER	1-E5
SPARK UNIT	1-F1
STAND	1-E10
STARTER CLUTCH	1-B7
STARTER MOTOR	1-B11
STEERING STEM	1-D7
STEP	1-E9
STRIPE	1-F10
SWINGARM	1-E11
TAILLIGHT	1-F3
TENSIONER	1-B5
THERMOSTAT	1-C8
TOOLS	1-F8
TOP BRIDGE	1-D6
TRANSMISSION	1-C4
TURN SIGNAL	1-F2
VALVE	1-B4
WATER PIPE	1-C6
WATER PUMP	1-B9
WHEEL, FR	1-D11
WHEEL, RR	1-E2
WIRE HARNESS	1-F4

GRID NO.

OIL FILTER • OIL PAN • OIL PUMP

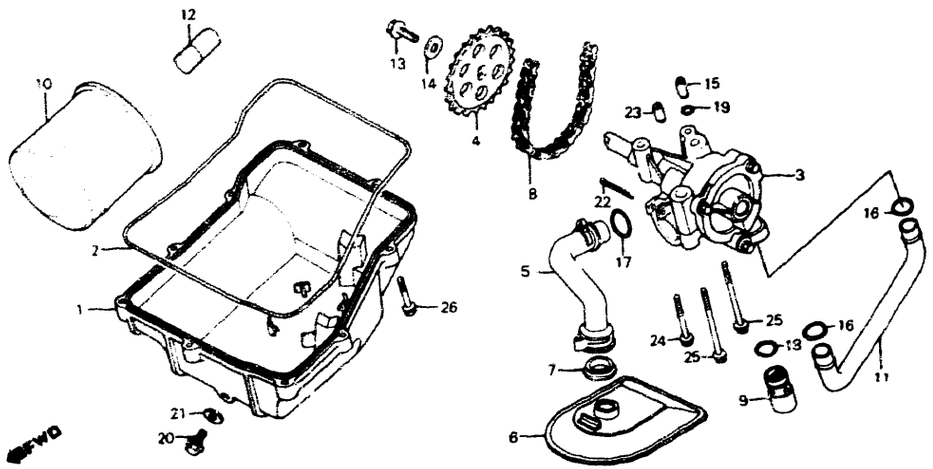

VF1000F '84

G43-BMB6-11

BLOCK NO E-11

REF NO	DESCRIPTION	AREA CODE	SERIAL NUMBER FROM	SERIAL NUMBER TO	QTY REQ	PART NUMBER	HONDA CODE
19	O-RING, 7.8X2.2		-------	-------	1	91308-283-000	0076497
	O-RING, 7.8X2.2		-------	-------	1	91313-393-003	0446922
20	BOLT, DRAIN PLUG, 12MM		-------	-------	1	92800-12000	0053975
21	GASKET, DRAIN PLUG		-------	-------	1	94109-12000	0171868
22	PIN, SPLIT, 2.0X25		-------	-------	1	94201-20250	0058370
	PIN, SPLIT, 2.0X32		-------	-------	1	94201-20320	0145607
	PIN, SPLIT, 2.0X35		-------	-------	1	94201-20350	0058388
23	PIN, DOWEL, 8X14		-------	-------	1	94301-08140	0069310
24	BOLT, FLANGE, 6X45		-------	-------	1	95700-06045-00	0687830
	BOLT, FLANGE, 6X45		-------	-------	1	95701-06045-00	2529089
	BOLT, FLANGE 6X45		-------	-------	1	95701-06045-07	2410967
25	BOLT, FLANGE, 6X70		-------	-------	2	95700-06070-00	0698720
	BOLT, FLANGE, 6X70		-------	-------	2	95701-06070-00	2427284
26	BOLT, FLANGE, 6X28		-------	-------	9	96000-06028-07	0807339
	BOLT, FLANGE, 6X28		-------	-------	9	96001-06028-07	2106011

SC15E ENGINE NO.: 2000043 TO 2009450
SC15E ENGINE NO.: 2000060 TO 2010776

CYLINDER BLOCK

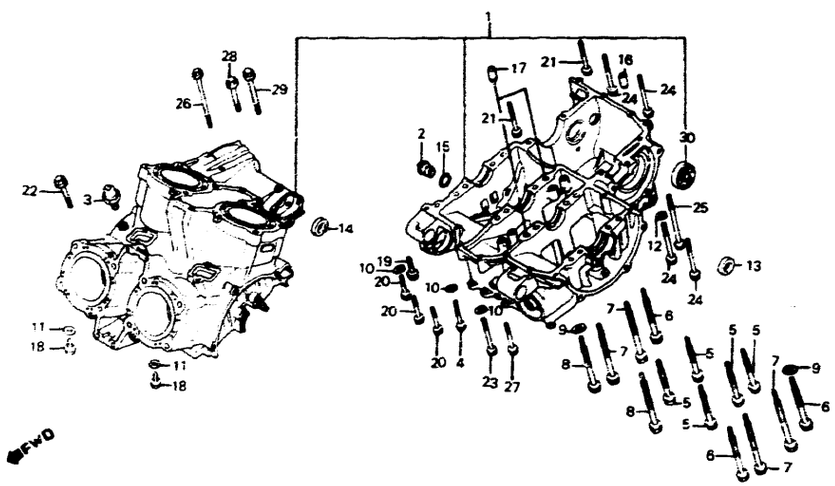

VF1000F '84

G43-BMB6-12

BLOCK NO. E-12

REF NO	DESCRIPTION	AREA CODE	SERIAL NUMBER FROM	SERIAL NUMBER TO	QTY REQ	PART NUMBER	HONDA CODE
1	BLOCK SET, CYLINDER		-------	2005130	1	11000-MB6-000	1751965
	BLOCK SET, CYLINDER		-------	2005130	1	11000-MB6-010	1806595
	BLOCK SET, CYLINDER		-------	-------	1	11000-MB6-020	2044527
	BLOCK SET, CYLINDER		-------	-------	1	11000-MB6-030	2099182
2	CAP, MAIN GALLERY		-------	-------	1	11207-MB0-000	1240779
3	SWITCH ASSY., OIL PRESSURE		-------	-------	1	35500-MB9-004	1087204
	SWITCH ASSY., OIL PRESSURE		-------	-------	1	35500-MJ0-004	1734599
	SWITCH ASSY., OIL PRESSURE		-------	-------	1	35500-MJ4-004	1851955
	SWITCH ASSY., OIL PRESSURE		-------	-------	1	35500-MJ4-014	1876721
	SWITCH, OIL PRESSURE (TEC)		-------	-------	1	37240-PA6-004	1337054
	SWITCH, OIL PRESSURE (TEC)		-------	-------	1	37240-657-013	1066331
4	BOLT, FLANGE, 6X42		-------	-------	1	90002-MB6-000	1761139
5	BOLT, UBS, 9X88		-------	-------	5	90014-MB0-010	1708536
6	BOLT, UBS, 9X98		-------	-------	3	90015-MB0-000	1243401
7	BOLT, UBS, 9X108		-------	-------	4	90016-MB0-000	1243419
8	BOLT, UBS, 9X94		-------	-------	2	90019-MB6-000	1750256
9	WASHER, SEALING, 10MM		-------	-------	2	90442-MB6-003	1750314
10	WASHER, SEALING, 6.5MM		-------	-------	3	90443-MB6-003	1755370
11	WASHER, SEALING, 6MM		-------	-------	2	90461-357-000	0350215
12	WASHER, RR. BRAKE ARM		-------	-------	1	90525-001-000	0094839

CONTENTS

TITLE	GRID
AIR CLEANER	1-E7
ALTERNATOR	1-B8
BATTERY	1-E5
BRAKE CALIPER, FR	1-D10
BRAKE CALIPER, RR	1-E1
BRAKE MASTER CYL. FR	1-D4
BRAKE MASTER CYL. RR	1-D12
CAM CHAIN	1-B5
CAMSHAFT	1-B4
CANISTER (AC)	1-F11
CARBURETOR (ASSY.)	1-C7
CARBURETOR COMPONENTS	1-C8
CHAIN CASE	1-E11
CLUTCH	1-D3
CLUTCH	1-B6
CLUTCH MASTER CYLINDER	1-D5
CONTROL SWITCHES	1-D3
COWL	1-F8
COWL, RR	1-E4
CRANKCASE COVER L	1-B9
CRANKCASE COVER R	1-B6
CRANKSHAFT	1-C2
CYLINDER BLOCK	1-B12
CYLINDER HEAD COVER	-B1
CYLINDER HEAD, FR.	1-B1
CYLINDER HEAD, RR.	1-B3
FENDER, FR.	1-D7
FENDER, RR	1-F1
FRAME BODY	1-F8
FUEL PUMP	1-E9
FUEL TANK	1-E3
GASKET KIT A	1-C9
GASKET KIT B	1-C9
GEARSHIFT DRUM	1-C5
HANDLEBAR	1-D6
HEADLIGHT	1-D1
IGNITION COIL	1-F4
INSTRUMENTS	1-D2
MARK	1-F10
MUFFLER, EXHAUST	1-E8
OIL FILTER	1-B11
OIL PAN	1-B11
OIL PUMP	1-B11
PEDAL, BRAKE	1-E9
PEDAL, GEARSHIFT	1-E9
PISTON	1-C2
PULSE GENERATOR	1-B7
RADIATOR	1-F5
SEAT	1-E4
SHOCK ABSORBER, FR	1-D8
SHOCK ABSORBER, RR	1-E12
SIDE COVER	1-E5
SPARK UNIT	1-F1
STAND	1-E10
STARTER CLUTCH	1-B7
STARTER MOTOR	1-B11
STEERING STEM	1-D7
STEP	1-E9
STRIPE	1-F10
SWINGARM	1-E11
TAILLIGHT	1-F3
TENSIONER	1-B5
THERMOSTAT	1-C6
TOOLS	1-F8
TOP BRIDGE	1-D8
TRANSMISSION	1-C4
TURN SIGNAL	1-F2
VALVE	1-B4
WATER PIPE	1-C6
WATER PUMP	1-B9
WHEEL, FR.	1-D11
WHEEL, RR.	1-E7
WIRE HARNESS	1-F4

GRID NO.

1-B 12

CYLINDER BLOCK

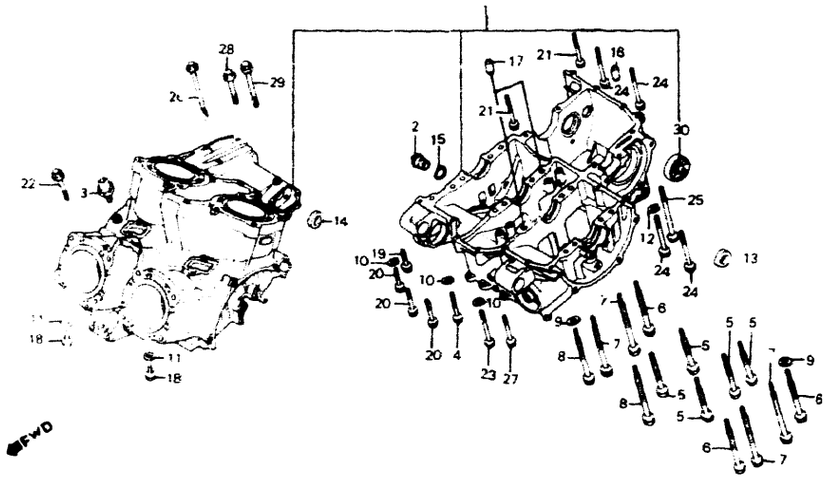

VF1000F '84

G43-BMB6-12

BLOCK NO E-12

REF NO	DESCRIPTION	AREA CODE	SERIAL NUMBER FROM	SERIAL NUMBER TO	QTY REQ	PART NUMBER	HONDA CODE
13	OIL SEAL 12.5X25X8		-------	-------	1	91204-425-003	1067024
14	OIL SEAL 14X24X6		-------	-------	1	91210-MB0-003	1260793
	OIL SEAL 14X24X6		-------	-------	1	91210-MB0-013	2248359
15	O-RING 18X2 8		-------	-------	1	91314-MB0-003	1260876
16	PIN DOWEL 8X14		-------	-------	1	94301-08140	0069310
17	PIN DOWEL 10X16		-------	-------	2	94303-10160	0690628
18	BOLT FLANGE 6X12		-------	-------	2	95700-06012-00	0487025
	BOLT FLANGE 6X12		-------	-------	2	95701-06012-00	2105799
19	BOLT FLANGE 6X28		-------	-------	1	95700-06028-00	0483933
	BOLT FLANGE 6X28		-------	-------	1	95701-06028-00	2105849
20	BOLT FLANGE 6X32		-------	-------	3	95700-06032-00	0484477
	BOLT FLANGE 6X32		-------	-------	3	95701-06032-00	2105856
21	BOLT FLANGE 6X45		-------	-------	2	95700-06045-00	0687830
	BOLT FLANGE 6X45		-------	-------	2	95701-06045-00	2529089
	BOLT FLANGE 6X45		-------	-------	2	95701-06045-07	2410967
22	BOLT FLANGE 6X50		-------	-------	1	95700-06050-07	1113596
23	BOLT FLANGE 6X55		-------	-------	1	95700-06055-00	0483982
	BOLT FLANGE 6X55		-------	-------	1	95701-06055-00	2533834
24	BOLT FLANGE 6X60		-------	-------	4	95700-06060-00	0687848
	BOLT FLANGE 6X60		-------	-------	4	95701-06060-00	2791119

SC15E ENGINE NO 2000043 TO 2009450
SC15E ENGINE NO 2000060 TO 2010776

VF1000F '84

BLOCK NO. E-12

REF NO	DESCRIPTION	AREA CODE	SERIAL NUMBER FROM	SERIAL NUMBER TO	QTY REQ	PART NUMBER	HONDA CODE
25	BOLT, FLANGE, 6X90		-------	-------	1	95700-06090-00	0484014
	BOLT, FLANGE, 6X90		-------	-------	1	95701-06090-00	2533842
26	BOLT, FLANGE, 6X100		-------	-------	1	95700-06100-07	1113612
27	BOLT, FLANGE, 8X45		-------	-------	1	95700-08045-00	0496497
	BOLT, FLANGE, 8X45		-------	-------	1	95701-08045-00	2533859
28	BOLT, FLANGE, 8X50		-------	-------	1	95700-08050-00	0687871
	BOLT, FLANGE, 8X50		-------	-------	1	95701-08050-00	2935740
29	BOLT, FLANGE, 8X80		-------	-------	1	95700-08080-00	0484048
30	BEARING, RADIAL BALL, 6304		-------	-------	1	96100-63040-00	0341644

CONTENTS

TITLE	GRID
AIR CLEANER	1-E7
ALTERNATOR	1-B6
BATTERY	1-E5
BRAKE CALIPER FR	1-D10
BRAKE CALIPER RR	1-E1
BRAKE MASTER CYL FR	1-D4
BRAKE MASTER CYL RR	1-D12
CAM CHAIN	1-B5
CAMSHAFT	1-B4
CANISTER (AC)	1-F11
CARBURETOR (ASSY)	1-C7
CARBURETOR COMPONENTS	1-C8
CHAIN CASE	1-E11
CLUTCH	1-D3
CLUTCH	1-B6
CLUTCH MASTER CYLINDER	1-D5
CONTROL SWITCHES	1-D3
COWL	1-F8
COWL RR	1-E4
CRANKCASE COVER L	1-B9
CRANKCASE COVER R	1-B6
CRANKSHAFT	1-C2
CYLINDER BLOCK	1-B12
CYLINDER HEAD COVER	1-B1
CYLINDER HEAD FR	1-B1
CYLINDER HEAD RR	1-B3
FENDER FR	1-D7
FENDER RR	1-F1
FRAME BODY	1-F6
FUEL PUMP	1-E8
FUEL TANK	1-E3
GASKET KIT A	1-C9
GASKET KIT B	1-C9
GEARSHIFT DRUM	1-C5
HANDLEBAR	1-D6
HEADLIGHT	1-D1
IGNITION COIL	1-F4
INSTRUMENTS	1-D2
MARK	1-F10
MUFFLER, EXHAUST	1-E8
OIL FILTER	1-B11
OIL PAN	1-B11
OIL PUMP	1-B11
PEDAL BRAKE	1-E9
PEDAL GEARSHIFT	1-E9
PISTON	1-C2
PULSE GENERATOR	1-B7
RADIATOR	1-F5
SEAT	1-E4
SHOCK ABSORBER FR	1-D8
SHOCK ABSORBER RR	1-E12
SIDE COVER	1-E5
SPARK UNIT	1-F1
STAND	1-E10
STARTER CLUTCH	1-B7
STARTER MOTOR	1-B11
STEERING STEM	1-D7
STEP	1-E9
STRIPE	1-F10
SWINGARM	1-E11
TAILLIGHT	1-F3
TENSIONER	1-B5
THERMOSTAT	1-C6
TOOLS	1-F8
TOP BRIDGE	1-D6
TRANSMISSION	1-C4
TURN SIGNAL	1-F2
VALVE	1-B4
WATER PIPE	1-C6
WATER PUMP	1-B9
WHEEL FR	1-D11
WHEEL RR	1-E2
WIRE HARNESS	1-F4

GRID NO.

1-C 1

CRANKSHAFT • PISTON

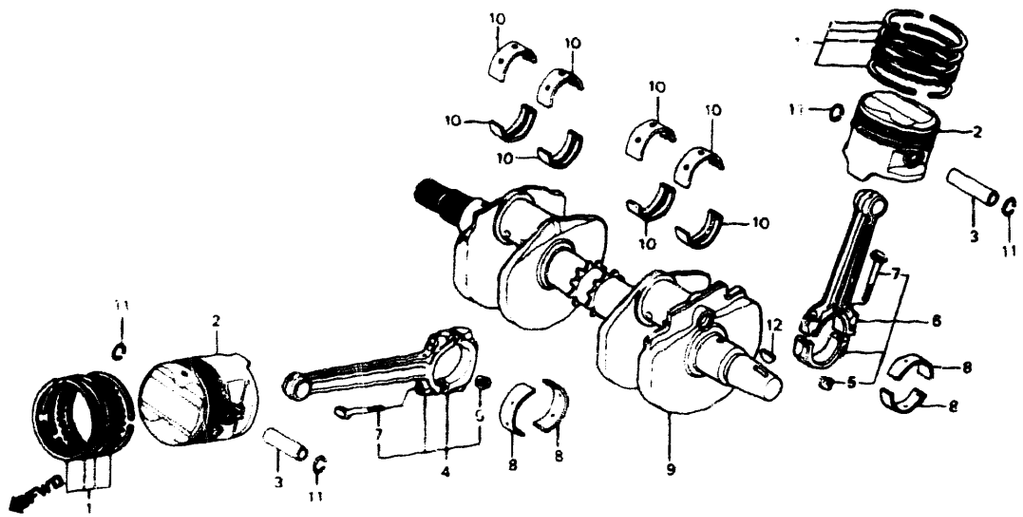

Crankcase I.D. 41.0 \ Crankshaft O.D. 38.0		1 0~-0.008	2 -0.008~-0.016
A	0~+0.008	C (Yellow)	B (Green)
B	+0.008~+0.016	B (Green)	A (Brown)

Connecting rod I.D. 43.0 \ Crank pin O.D. 40.0		A 0~-0.008	B -0.008~-0.016
1	0~+0.008	C (Yellow)	B (Green)
2	+0.008~+0.016	B (Green)	A (Brown)

G43 BMB6-13TABLE

1-C 2

SC15E ENGINE NO 2000043 TO 2009450
SC15E ENGINE NO 2000060 TO 2010776

VF1000F '84

BLOCK NO. E-13

REF NO	DESCRIPTION	AREA CODE	SERIAL NUMBER FROM	SERIAL NUMBER TO	QTY REQ	PART NUMBER	HONDA CODE
1	RING SET, PISTON (STD.)		-------	-------	4	13011-MB6-305	1759828
	RING SET, PISTON (STD.)		-------	-------	4	13011-MB6-315	2296457
	RING SET, PISTON (STD.)		-------	-------	4	13011-MM5-640	2925881
	RING SET, PISTON (0.25)		-------	-------	(4)	13012-MB6-305	1806611
	RING SET, PISTON (0.25)		-------	-------	(4)	13012-MB6-315	2396828
	RING SET, PISTON (0.25)		-------	-------	(4)	13012-MM5-640	3048972
	RING SET, PISTON (0.50)		-------	-------	(4)	13013-MB6-305	1806629
	RING SET, PISTON (0.50)		-------	-------	(4)	13013-MB6-315	2396836
2	PISTON (STD.)		-------	-------	4	13101-MB6-000	1748136
	PISTON (0.25)		-------	-------	(4)	13102-MB6-305	1759836
	PISTON (0.50)		-------	-------	(4)	13103-MB6-305	1806637
3	PIN, PISTON		-------	-------	4	13111-MB6-000	1752120
4	ROD ASSY. A, FR. CONNECTING		-------	2002639	2	13201-MB6-000	1748144
	ROD ASSY. A, FR. CONNECTING		-------	-------	2	13201-MB6-010	2032597
	ROD ASSY. B, FR. CONNECTING		-------	-------	2	13202-MB6-000	1752153
	ROD ASSY. B, FR. CONNECTING		-------	-------	2	13202-MB6-010	2032605
	ROD ASSY. C, FR. CONNECTING		-------	-------	2	13203-MB6-000	1752161
	ROD ASSY. C, FR. CONNECTING		-------	-------	2	13203-MB6-010	1956366
	ROD ASSY. A, FR. CONNECTING		-------	-------	2	13203-MB6-680	3076395
	ROD ASSY. D, FR. CONNECTING		-------	2002639	2	13204-MB6-000	1752179
	ROD ASSY. D, FR. CONNECTING		-------	-------	2	13204-MB6-010	2032613
	ROD ASSY. E, FR. CONNECTING		-------	2002639	2	13205-MB6-000	1752187
	ROD ASSY. E, FR. CONNECTING		-------	-------	2	13205-MB6-010	2032621
5	NUT, CONNECTING ROD		-------	-------	8	13205-634-010	0549493
6	ROD ASSY. A, RR. CONNECTING		-------	2002676	2	13206-MB6-000	1748151
	ROD ASSY. A, RR. CONNECTING		-------	-------	2	13206-MB6-010	2032639
	ROD ASSY. B, RR. CONNECTING		-------	-------	2	13207-MB6-010	2032647
	ROD ASSY. C, RR. CONNECTING		-------	-------	2	13208-MB6-000	1752203
	ROD ASSY. C, RR. CONNECTING		-------	-------	2	13208-MB6-010	1948736
	ROD ASSY. D, RR. CONNECTING		-------	2002676	2	13209-MB6-000	1752211
	ROD ASSY. D, RR. CONNECTING		-------	-------	2	13209-MB6-010	2032654
	ROD ASSY. E, RR. CONNECTING		-------	2002676	2	13210-MB6-000	1752229
	ROD ASSY. E, RR. CONNECTING		-------	-------	2	13210-MB6-010	2032662
7	BOLT, CONNECTING ROD		-------	-------	8	13213-MC7-004	1213982
8	BEARING A, CONNECTING ROD (BROWN)		-------	-------	8	13224-MB6-013	1881077
	BEARING B, CONNECTING ROD (GREEN)		-------	-------	8	13225-MB6-013	1881085
	BEARING C, CONNECTING ROD (YELLOW)		-------	-------	8	13226-MB6-013	1881093
9	CRANKSHAFT COMP.		-------	-------	1	13300-MB6-000	1748201
	CRANKSHAFT COMP.		-------	-------	1	13300-MB6-010	2220176

CONTENTS

TITLE	GRID
AIR CLEANER	1-E7
ALTERNATOR	1-B8
BATTERY	1-F5
BRAKE CALIPER, FR	1-D10
BRAKE CALIPER, RR	1-E1
BRAKE MASTER CYL. FR	1-D4
BRAKE MASTER CYL. RR	1-D12
CAM CHAIN	1-B5
CAMSHAFT	1-B4
CANISTER (AC)	1-F11
CARBURETOR (ASSY.)	1-C7
CARBURETOR COMPONENTS	1-C8
CHAIN CASE	1-E11
CLUTCH	1-D3
CLUTCH	1-B6
CLUTCH MASTER CYLINDER	1-D5
CONTROL SWITCHES	1-D3
COIL	1-F8
COIL, RR	1-E4
CRANKCASE COVER L	1-B9
CRANKCASE COVER R	1-B6
CRANKSHAFT	1-C2
CYLINDER BLOCK	1-B12
CYLINDER HEAD COVER	1-B1
CYLINDER HEAD FR	1-B1
CYLINDER HEAD RR	1-B3
FENDER, FR	1-D7
FENDER, RR	1-F1
FRAME BODY	1-F6
FUEL PUMP	1-E6
FUEL TANK	1-E3
GASKET KIT A	1-C9
GASKET KIT B	1-C9
GEARSHIFT DRUM	1-C5
HANDLEBAR	1-D6
HEADLIGHT	1-D1
IGNITION COIL	1-F4
INSTRUMENTS	1-D2
MARK	1-F10
MUFFLER, EXHAUST	1-E8
OIL FILTER	1-B11
OIL PAN	1-B11
OIL PUMP	1-B11
PEDAL, BRAKE	1-E9
PEDAL, GEARSHIFT	1-E9
PISTON	1-C2
PULSE GENERATOR	1-B7
RADIATOR	1-F5
SEAT	1-E4
SHOCK ABSORBER, FR	1-D8
SHOCK ABSORBER, RR	1-E12
SIDE COVER	1-E5
SPARK UNIT	1-F1
STAND	1-E10
STARTER CLUTCH	1-B7
STARTER MOTOR	1-B11
STEERING STEM	1-D7
STEP	1-E9
STRIPE	1-F10
SWINGARM	1-E11
TAILLIGHT	1-F3
TENSIONER	1-B5
THERMOSTAT	1-C6
TOOLS	1-F8
TOP BRIDGE	1-D6
TRANSMISSION	1-C4
TURN SIGNAL	1-F2
VALVE	1-B4
WATER PIPE	1-C6
WATER PUMP	1-B9
WHEEL FR	1-D11
WHEEL RR	1-E2
WIRE HARNESS	1-F4

GRID NO.

1-C 2

CRANKSHAFT • PISTON

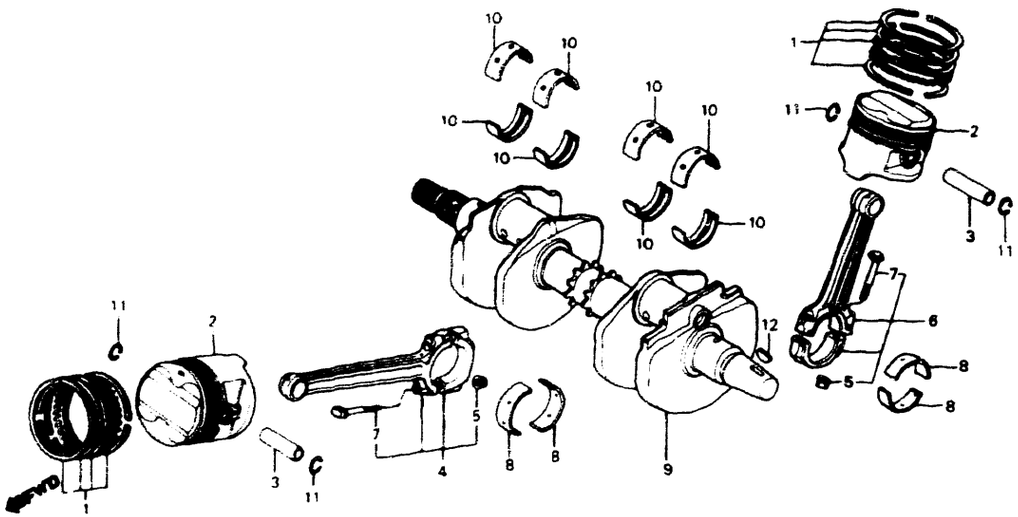

Crankpin O.D. 38Ø / Crankcase I.D. 41Ø		1	2
		0~-0.008	-0.008~-0.016
A	0~+0.008	C (Yellow)	B (Green)
B	+0.008~+0.016	B (Green)	A (Brown)

Crank pin O.D. 40Ø / Connecting rod I.D. 43Ø		A	B
		0~-0.008	-0.008~-0.016
1	0~+0.008	C (Yellow)	B (Green)
2	+0.008~+0.016	B (Green)	A (Brown)

G43-BMB8 13TABLE

SC15E ENGINE NO 2000043 TO 2009450
SC15E ENGINE NO 2000060 TO 2010776

VF1000F '84

BLOCK NO E-13

REF NO	DESCRIPTION	AREA CODE	SERIAL NUMBER FROM	SERIAL NUMBER TO	QTY REQ	PART NUMBER	HONDA CODE
10	BEARING A, CRANKSHAFT (BROWN)		-------	-------	8	13313-MB6-003	1748219
	BEARING B, CRANKSHAFT (GREEN)		-------	-------	8	13314-MB6-003	1748227
	BEARING C, CRANKSHAFT (YELLOW)		-------	-------	8	13315-MB6-003	1748235
11	CLIP, PISTON PIN, 1 2X20		-------	-------	8	90601-KA5-000	1028398
12	KEY, WOODRUFF		-------	-------	1	90741-413-000	0957571

CONTENTS

TITLE	GRID
AIR CLEANER	1-E7
ALTERNATOR	1-B8
BATTERY	1-E5
BRAKE CALIPER FR	1-D10
BRAKE CALIPER RR	1-E1
BRAKE MASTER CYL FR	1-D4
BRAKE MASTER CYL RR	1-D12
CAM CHAIN	1-B5
CAMSHAFT	1-B4
CANISTER (AC)	1-F11
CARBURETOR (ASSY)	1-C7
CARBURETOR COMPONENTS	1-C8
CHAIN CASE	1-E11
CLUTCH	1-D3
CLUTCH	1-B6
CLUTCH MASTER CYLINDER	1-D5
CONTROL SWITCHES	1-D3
COWL	1-F8
COWL RR	1-E4
CRANKCASE COVER L	1-B9
CRANKCASE COVER R	1-B6
CRANKSHAFT	1-C2
CYLINDER BLOCK	1-B12
CYLINDER HEAD COVER	1-B1
CYLINDER HEAD FR	1-B1
CYLINDER HEAD RR	1-B3
FENDER FR	1-D7
FENDER RR	1-F1
FRAME BODY	1-F6
FUEL PUMP	1-E6
FUEL TANK	1-E3
GASKET KIT A	1-C3
GASKET KIT B	1-C9
GEARSHIFT DRUM	1-C5
HANDLEBAR	1-D6
HEADLIGHT	1-D1
IGNITION COIL	1-F4
INSTRUMENTS	1-D2
MARK	1-F10
MUFFLER EXHAUST	1-E8
OIL FILTER	1-B11
OIL PAN	1-B11
OIL PUMP	1-B11
PEDAL BRAKE	1-E9
PEDAL GEARSHIFT	1-E9
PISTON	1-C2
PULSE GENERATOR	1-B7
RADIATOR	1-F5
SEAT	1-E4
SHOCK ABSORBER FR	1-D8
SHOCK ABSORBER RR	1-E12
SIDE COVER	1-E5
SPARK UNIT	1-F1
STAND	1-E10
STARTER CLUTCH	1-B7
STARTER MOTOR	1-B11
STEERING STEM	1-D7
STEP	1-E9
STRIPE	1-F10
SWINGARM	1-E11
TAILLIGHT	1-F3
TENSIONER	1-B5
THERMOSTAT	1-C6
TOOLS	1-F8
TOP BRIDGE	1-D6
TRANSMISSION	1-C4
TURN SIGNAL	1-F2
VALVE	1-B4
WATER PIPE	1-C6
WATER PUMP	1-B9
WHEEL FR	1-D11
WHEEL RR	1-E2
WIRE HARNESS	1-F4

GRID NO.

1-C 3

TRANSMISSION

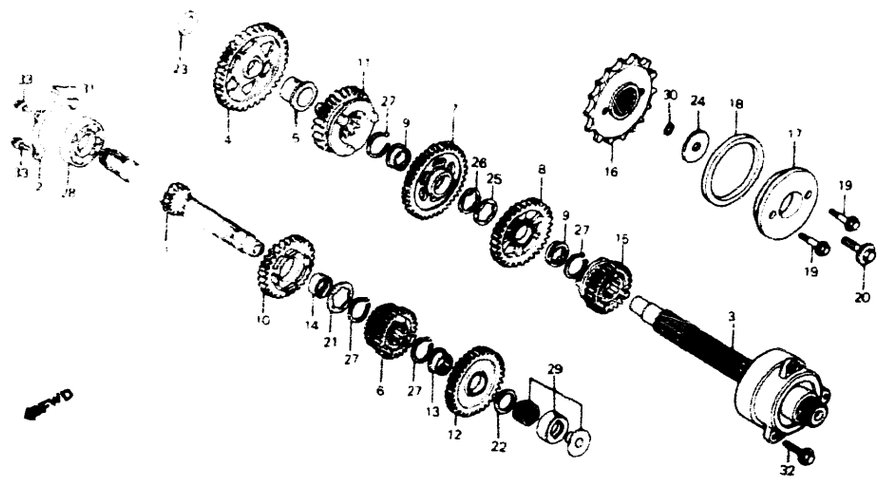

VF1000F 84

G43 5M86 14

BLOCK NO. E-14

REF NO	DESCRIPTION	AREA CODE	SERIAL NUMBER FROM	SERIAL NUMBER TO	QTY REQ	PART NUMBER	HONDA CODE
1	MAINSHAFT (15T)		-------	-------	1	23211-MB6-000	1753466
2	PLATE, BEARING SETTING		-------	-------	1	23212-MB0-010	1781582
3	COUNTERSHAFT COMP		-------	-------	1	23220-MB2-020	1850247
	COUNTERSHAFT COMP		-------	-------	1	23220-MB6-680	2499143
4	GEAR, COUNTERSHAFT LOW (41T)		-------	-------	1	23421-MB6-000	1698950
5	COLLAR, 22X15.1		-------	-------	1	23422-MB6-000	1753516
6	GEAR, MAINSHAFT SECOND & THIRD (19T & 23T)		-------	-------	1	23431-MB6-000	1749084
7	GEAR, COUNTERSHAFT SECOND (36T)		-------	-------	1	23441-MB6-000	1698984
8	GEAR, COUNTERSHAFT THIRD		-------	-------	1	23461-MB6-000	1753565
9	COLLAR, SPLINE, 28X15.5		-------	-------	2	23462-MB2-010	2053486
10	GEAR, MAINSHAFT FOURTH (25T)		-------	-------	1	23471-MB6-000	1749092
11	GEAR, COUNTERSHAFT FOURTH (31T)		-------	-------	1	23481-MB6-000	1698992
12	GEAR, MAINSHAFT FIFTH (27T)		-------	-------	1	23491-MB6-000	1749100
13	COLLAR, SPLINE, 28X15.9		-------	-------	1	23492-MB6-000	1749118
14	COLLAR, 28X13.95		-------	-------	1	23495-MB4-000	1385475
15	GEAR, COUNTERSHAFT FIFTH (28T)		-------	-------	1	23501-MB6-000	1749126
16	SPROCKET, DRIVE (17T)		-------	-------	1	23801-438-000	1051838
17	GUIDE, RING		-------	-------	1	23820-438-003	1051846

SC15E ENGINE NO 2000043 TO 2009450
SC15E ENGINE NO 2000060 TO 2010776

VF1000F 84

BLOCK NO. E-14

REF NO	DESCRIPTION	AREA CODE	SERIAL NUMBER FROM	SERIAL NUMBER TO	QTY REQ	PART NUMBER	HONDA CODE
18	RING, DAMPER		-------	-------	1	23821-MB6-000	1753664
19	BOLT, FLANGE, 6X20		-------	-------	2	90020-438-000	0766493
20	BOLT, SPECIAL, 10MM		-------	-------	1	90037-422-003	1053032
21	WASHER, THRUST, 28MM		-------	-------	1	90451-422-000	0691253
22	WASHER, THRUST, 22MM		-------	-------	1	90453-MB6-000	1762202
23	WASHER, THRUST, 20MM		-------	-------	1	90454-428-000	0684902
24	WASHER, 10.2MM		-------	-------	1	90459-422-000	0691787
25	WASHER, THRUST, 29MM		-------	-------	1	90461-MB2-000	1434612
26	WASHER, LOCK, 28MM		-------	-------	1	90462-MB2-000	1434620
27	CIRCLIP, 28MM		-------	-------	4	90601-422-000	0691303
28	BEARING, RADIAL BALL, 6206		-------	-------	1	91006-MB4-003	1388883
	BEARING, RADIAL BALL, 6206		-------	-------	1	91006-MB4-004	1391598
29	BEARING, NEEDLE, 22MM		-------	-------	1	91023-MB6-004	1745405
30	O-RING, 9.8X2.4		-------	-------	1	91305-422-000	0688986
31	SCREW, FLAT, 6X16		-------	-------	1	93600-06016-0A	0805358
32	BOLT, FLANGE, 8X28		-------	-------	3	95700-08028-08	0412601
33	BOLT, FLANGE, 6X16		-------	-------	2	96000-06016-00	1113687
	BOLT, FLANGE, 6X16		-------	-------	2	96001-06016-00	2105955

CONTENTS

TITLE	GRID
AIR CLEANER	1-E7
ALTERNATOR	1-B8
BATTERY	1-E5
BRAKE CALIPER FR	1-D10
BRAKE CALIPER RR	1-E1
BRAKE MASTER CYL FR	1-D4
BRAKE MASTER CYL RR	1-D12
CAM CHAIN	1-B5
CAMSHAFT	1-B4
CANISTER (AC)	1-F11
CARBURETOR (ASSY.)	1-C7
CARBURETOR COMPONENTS	1-C8
CHAIN CASE	1-E11
CLUTCH	1-D3
CLUTCH	1-B6
CLUTCH MASTER CYLINDER	1-D5
CONTROL SWITCHES	1-D3
COIL	1-F8
COIL RR	1-E4
CRANKCASE COVER L	1-B9
CRANKCASE COVER R	1-B6
CRANKSHAFT	1-C2
CYLINDER BLOCK	1-B12
CYLINDER HEAD COVER	1-B1
CYLINDER HEAD FR	1-B1
CYLINDER HEAD RR	1-B3
FENDER FR	1-D7
FENDER RR	1-F1
FRAME BODY	1-F6
FUEL PUMP	1-E6
FUEL TANK	1-E3
GASKET KIT A	1-C9
GASKET KIT B	1-C9
GEARSHIFT DRUM	1-C5
HANDLEBAR	1-D6
HEADLIGHT	1-D1
IGNITION COIL	1-F4
INSTRUMENTS	1-D2
MARK	1-F10
MUFFLER, EXHAUST	1-E8
OIL FILTER	1-B11
OIL PAN	1-B11
OIL PUMP	1-B11
PEDAL, BRAKE	1-E9
PEDAL, GEARSHIFT	1-E9
PISTON	1-C2
PULSE GENERATOR	1-B7
RADIATOR	1-F5
SEAT	1-E4
SHOCK ABSORBER FR	1-D8
SHOCK ABSORBER RR	1-E12
SIDE COVER	1-E5
SPARK UNIT	1-F1
STAND	1-E10
STARTER CLUTCH	1-B7
STARTER MOTOR	1-B11
STEERING STEM	1-D7
STEP	1-E9
STRIPE	1-F10
SWINGARM	1-E11
TAILLIGHT	1-F3
TENSIONER	1-B5
THERMOSTAT	1-C6
TOOLS	1-F8
TOP BRIDGE	1-D6
TRANSMISSION	1-C4
TURN SIGNAL	1-F2
VALVE	1-B4
WATER PIPE	1-C6
WATER PUMP	1-B9
WHEEL FR	1-D11
WHEEL RR	1-E2
WIRE HARNESS	1-F4

GRID NO.

1-C 4

GEARSHIFT DRUM

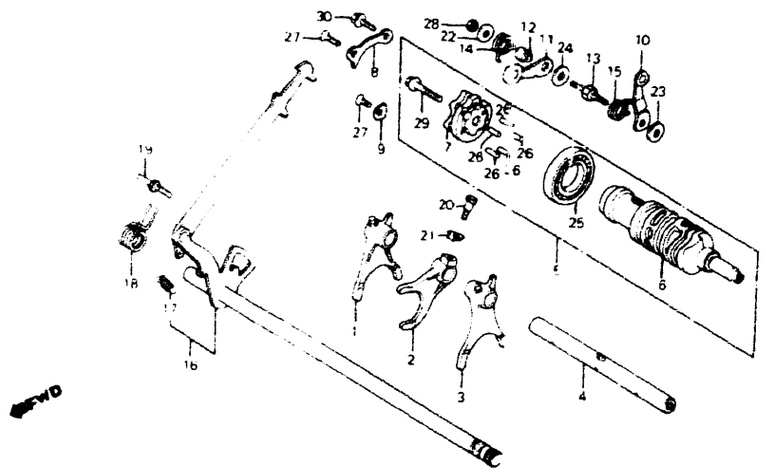

VF1000F 84

G4 -8MB6 15

BLOCK NO E-15

REF NO	DESCRIPTION	AREA CODE	SERIAL NUMBER FROM	TO	QTY REQ	PART NUMBER	HONDA CODE
1	FORK R GEARSHIFT		-------	-------	1	24211-MB0-870	1716026
2	FORK CENTER GEARSHIFT		-------	-------	1	24212-MB6-000	1749134
3	FORK L GEARSHIFT		-------	-------	1	24213-MB6-000	1708270
4	SHAFT COMP GEARSHIFT FORK		-------	-------	1	24261-MB2-000	1428457
5	DRUM ASSY GEARSHIFT		-------	-------	1	24300-MB6-000	1708288
6	DRUM GEARSHIFT		-------	-------	1	24302-MB6-000	1708296
7	PLATE DRUM CAM		-------	-------	1	24305-MB6-000	1708304
8	PLATE A DRUM SETTING		-------	-------	1	24320-MB0-000	1242916
9	PLATE B DRUM SETTING		-------	-------	1	24321-MB0-000	1242924
10	ARM COMP NEUTRAL STOPPER		-------	-------	1	24420-MB0-000	1242932
11	ARM COMP SHIFT DRUM STOPPER		-------	-------	1	24430-MB0-000	1242940
12	COLLAR GEARSHIFT DRUM STOPPER		-------	-------	1	24432-413-000	0494336
13	SHAFT SHIFT DRUM STOPPER PIVOT		-------	-------	1	24434-MB0-000	1242957
14	SPRING SHIFT DRUM STOPPER		-------	-------	1	24435-MB0-000	1242965
15	SPRING NEUTRAL STOPPER		-------	-------	1	24436-MB0-000	1242973
16	SPINDLE COMP GEARSHIFT		-------	-------	1	24610-MB2-000	1428493
17	SPRING GEARSHIFT ARM		-------	-------	1	24641-MB0-010	1554047
18	SPRING GEARSHIFT RETURN		-------	-------	1	24651-MB0-000	1243005
19	PIN SHIFT RETURN SPRING		-------	-------	1	24652-259-000	0039461

1-C 5

SC15E ENGINE NO 2000043 TO 2009450
SC15E ENGINE NO 2000060 TO 2010776

VF1000F 84

BLOCK NO. E-15

REF NO	DESCRIPTION	AREA CODE	SERIAL NUMBER FROM	TO	QTY REQ	PART NUMBER	HONDA CODE
20	BOLT, SPECIAL 7X18		-------	-------	1	90041-MB0-000	1243468
21	WASHER, LOCK		-------	-------	1	90407-MB0-000	1243575
22	WASHER, SHIFT DRUM STOPPER		-------	-------	1	90487-MB0-000	1243666
23	WASHER, 6X2.3		-------	-------	1	90488-MB0-000	1243674
24	WASHER, SPECIAL 6MM		-------	-------	1	90489-MB0-000	1266097
25	BEARING, 16005		-------	-------	1	91051-719-003	1243823
26	ROLLER, 4X13.8		-------	-------	5	91101-MB0-003	1243831
27	SCREW, FLAT 6X16		-------	-------	2	93600-06016-0A	0805358
28	NUT, HEX , 6MM		-------	-------	1	94002-06200	1317015
29	BOLT, FLANGE, 8X32		-------	-------	1	95800-08032-00	0768879
30	BOLT, FLANGE, 6X16		-------	-------	1	96000-06016-00	1113687
	BOLT, FLANGE, 6X16		-------	-------	1	96001-06016-00	2105955

CONTENTS

TITLE	GRID
AIR CLEANER	1-E7
ALTERNATOR	1-B8
BATTERY	1-E5
BRAKE CALIPER FR	1-D13
BRAKE CALIPER RR	1-E1
BRAKE MASTER CYL FR	1-D4
BRAKE MASTER CYL RR	1-D12
CAM CHAIN	1-B5
CAMSHAFT	1-B4
CANISTER (AC)	1-F11
CARBURETOR (ASSY)	1-C7
CARBURETOR COMPONENTS	1-C8
CHAIN CASE	1-E11
CLUTCH	1-D3
CLUTCH	1-B6
CLUTCH MASTER CYLINDER	1-D5
CONTROL SWITCHES	1-D3
COWL	1-F8
COWL RR	1-E4
CRANKCASE COVER L	1-B9
CRANKCASE COVER R	1-B6
CRANKSHAFT	1-C2
CYLINDER BLOCK	1-B12
CYLINDER HEAD COVER	1-B1
CYLINDER HEAD FR	1-B1
CYLINDER HEAD RR	1-B3
FENDER FR	1-D7
FENDER RR	1-F1
FRAME BODY	1-F6
FUEL PUMP	1-E6
FUEL TANK	1-E3
GASKET KIT A	1-C9
GASKET KIT B	1-C9
GEARSHIFT DRUM	1-C5
HANDLEBAR	1-D6
HEADLIGHT	1-D1
IGNITION COIL	1-F4
INSTRUMENTS	1-D2
MARK	1-F10
MUFFLER, EXHAUST	1-E8
OIL FILTER	1-B11
OIL PAN	1-B11
OIL PUMP	1-B11
PEDAL BRAKE	1-E9
PEDAL GEARSHIFT	1-E9
PISTON	1-C2
PULSE GENERATOR	1-B7
RADIATOR	1-F5
SEAT	1-E4
SHOCK ABSORBER FR	1-D8
SHOCK ABSORBER RR	1-E12
SIDE COVER	1-E5
SPARK UNIT	1-F1
STAND	1-E10
STARTER CLUTCH	1-B7
STARTER MOTOR	1-B11
STEERING STEM	1-D7
STEP	1-E9
STRIPE	1-F10
SWINGARM	1-E11
TAILLIGHT	1-F3
TENSIONER	1-B5
THERMOSTAT	1-C6
TOOLS	1-F8
TOP BRIDGE	1-D6
TRANSMISSION	1-C4
TURN SIGNAL	1-F2
VALVE	1-B4
WATER PIPE	1-C6
WATER PUMP	1-B9
WHEEL FR	1-D11
WHEEL RR	1-E2
WIRE HARNESS	1-F4

GRID NO

1-C 5

WATER PIPE • THERMOSTAT

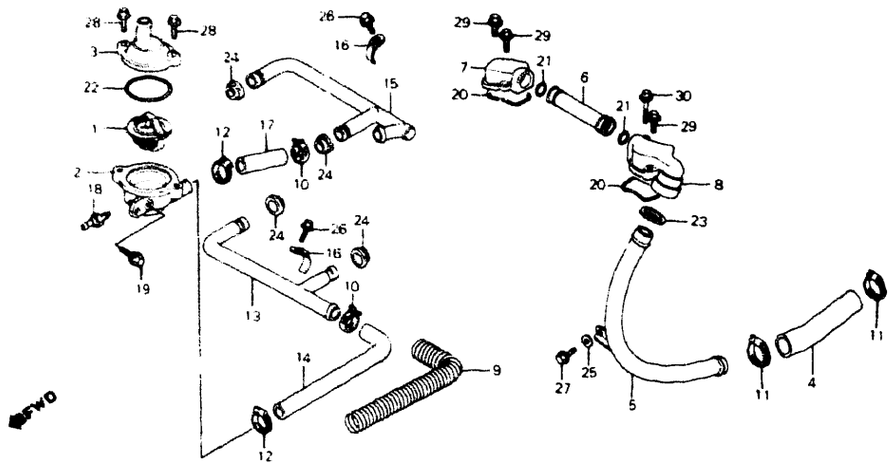

VF1000F '84

G43-BMB6-16

BLOCK NO. E-16

REF NO	DESCRIPTION	AREA CODE	SERIAL NUMBER FROM	SERIAL NUMBER TO	QTY REQ	PART NUMBER	HONDA CODE
1	THERMOSTAT		-------	-------	1	19300-MB0-003	1242155
2	CASE, THERMOSTAT		-------	-------	1	19311-MB6-000	1748904
3	COVER, THERMOSTAT		-------	-------	1	19315-MB6-000	1748912
4	HOSE, CONNECTING		-------	-------	1	19502-MB6-000	1748920
5	PIPE, WATER OUTLET CONNECTING		-------	-------	1	19504-MB6-000	1748938
6	PIPE, CONNECTING		-------	-------	1	19507-MB6-000	1748946
7	CAP A, CONNECTING PIPE		-------	-------	1	19508-MB6-000	1748953
8	CAP B, CONNECTING PIPE		-------	-------	1	19509-MB6-000	1748961
9	WIRE, GUARD		-------	-------	1	19512-MB6-003	1748987
10	CLAMP, WATER HOSE		-------	-------	2	19514-ME9-000	1368281
11	CLAMP A, WATER HOSE		-------	-------	2	19516-MB6-000	1742402
12	CLAMP B, WATER HOSE		-------	-------	2	19517-MB6-000	1742410
13	PIPE A, WATER		-------	-------	1	19520-MB2-000	1428085
14	HOSE A, WATER		-------	-------	1	19526-MB6-000	1748995
15	PIPE B, WATER		-------	-------	1	19530-MB6-000	1749001
16	CLAMP, WATER PIPE		-------	-------	2	19534-MB6-000	1749019
17	HOSE B, WATER		-------	-------	1	19536-MB6-000	1749027
18	SENDING UNIT, WATER TEMPERATURE		-------	-------	1	37750-PC1-004	1130780
19	BOLT, SPECIAL, 8MM		-------	-------	1	90042-MB6-000	1745140

SC15E ENGINE NO. 2000043 TO 2009450
SC15E ENGINE NO. 2000060 TO 2010776

VF1000F '84

BLOCK NO. E-16

REF NO	DESCRIPTION	AREA CODE	SERIAL NUMBER FROM	SERIAL NUMBER TO	QTY REQ	PART NUMBER	HONDA CODE
20	GASKET, CONNECTING CAP		-------	-------	2	91301-MB0-000	1243880
21	O-RING, 21.9X2.3		-------	-------	2	91301-MB6-003	2954766
	O-RING, 21.9X2.5		-------	-------	2	91302-371-013	1541390
	O-RING, 21.9X2.3		-------	-------	2	91302-371-023	2458644
22	O-RING, 54X2		-------	-------	1	91307-MB0-003	1260827
23	SEAL B, WATER PIPE		-------	-------	1	91315-MB6-000	1750355
	SEAL B, WATER PIPE		-------	-------	1	91315-MB6-003	1776723
24	O RING, 13X2.5		-------	-------	4	91335-567-000	0422428
25	WASHER, FLAT, 6MM		-------	-------	1	94101-06000	0059071
	WASHER, PLAIN, 6MM		-------	-------	1	94101-06080	3136074
	WASHER, PLAIN, 6MM		-------	-------	1	94101-06800	0345900
26	BOLT, FLANGE, 6X14		-------	-------	2	96000-06014-00	0782854
	BOLT, FLANGE, 6X40		-------	-------	2	96001-06014-00	2154672
27	BOLT, FLANGE, 6X16		-------	-------	1	96000-06016-00	1113687
	BOLT, FLANGE, 6X16		-------	-------	1	96001-06016-00	2105955
28	BOLT, FLANGE, 6X22		-------	-------	2	96000-06022-07	1292234
	BOLT, FLANGE, 6X22		-------	-------	2	96001-06022-07	2105971
29	BOLT, FLANGE, 6X35		-------	-------	3	96000-06035-07	0807362
	BOLT, FLANGE, 6X35		-------	-------	3	96001-06035-07	2533891
30	BOLT, FLANGE, 6X40		-------	-------	1	96000-06040-07	1417377
	BOLT, FLANGE, 6X40		-------	-------	1	96001-06040-07	2479632

CONTENTS

TITLE	GRID
AIR CLEANER	1-E7
ALTERNATOR	1-B8
BATTERY	1-E5
BRAKE CALIPER, FR	1-D10
BRAKE CALIPER, RR	1-E1
BRAKE MASTER CYL. FR	1-D4
BRAKE MASTER CYL. RR	1-D12
CAM CHAIN	1-B5
CAMSHAFT	1-B4
CANISTER (AC)	1-F11
CARBURETOR (ASSY.)	1-C7
CARBURETOR COMPONENTS	1-C8
CHAIN CASE	1-E11
CLUTCH	1-D3
CLUTCH	1-B5
CLUTCH MASTER CYLINDER	1-D5
CONTROL SWITCHES	1-D3
COWL	1-F8
COWL, RR	1-E4
CRANKCASE COVER, L	1-B9
CRANKCASE COVER, R	1-B6
CRANKSHAFT	1-C2
CYLINDER BLOCK	1-B12
CYLINDER HEAD COVER	1-B1
CYLINDER HEAD, FR	1-B1
CYLINDER HEAD, RR	1-B3
FENDER, FR	1-D7
FENDER, RR	1-F1
FRAME BODY	1-F6
FUEL PUMP	1-E6
FUEL TANK	1-E3
GASKET KIT A	1-C9
GASKET KIT B	1-C9
GEARSHIFT DRUM	1-C5
HANDLEBAR	1-D6
HEADLIGHT	1-D1
IGNITION COIL	1-F4
INSTRUMENTS	1-D2
MARK	1-F10
MUFFLER, EXHAUST	1-E8
OIL FILTER	1-B11
OIL PAN	1-B11
OIL PUMP	1-B11
PEDAL, BRAKE	1-E9
PEDAL, GEARSHIFT	1-E9
PISTON	1-C2
PULSE GENERATOR	1-B7
RADIATOR	1-F5
SEAT	1-E4
SHOCK ABSORBER, FR	1-D8
SHOCK ABSORBER, RR	1-E12
SIDE COVER	1-E5
SPARK UNIT	1-F1
STAND	1-E10
STARTER CLUTCH	1-B7
STARTER MOTOR	1-B11
STEERING STEM	1-D7
STEP	1-E9
STRIPE	1-F10
SWINGARM	1-E11
TAILLIGHT	1-F3
TENSIONER	1-B5
THERMOSTAT	1-C6
TOOLS	1-F8
TOP BRIDGE	1-D6
TRANSMISSION	1-C4
TURN SIGNAL	1-F2
VALVE	1-B4
WATER PIPE	1-C6
WATER PUMP	1-B9
WHEEL, FR	1-D11
WHEEL, RR	1-E2
WIRE HARNESS	1-F4

GRID NO.

1-C 6

CARBURETOR (ASSY.)

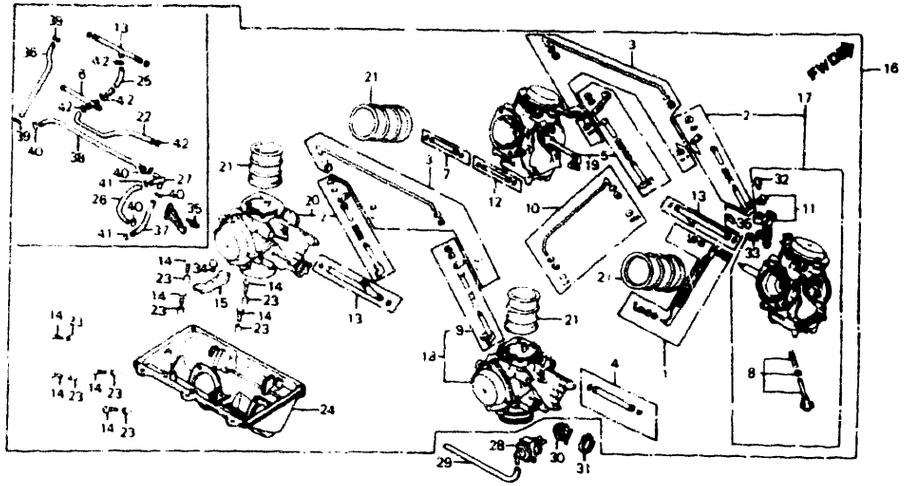

VF1000F 84

G43-8MB6 50

BLOCK NO. E-17

REF NO	DESCRIPTION	AREA CODE	SERIAL NUMBER FROM	SERIAL NUMBER TO	QTY REQ	PART NUMBER	HONDA CODE
1	LEVER SET A, LINK		-------	-------	1	16017-MB4-671	1390301
2	LINK SET A, STARTER		-------	-------	2	16018-MB0-671	1241793
	LINK SET A, STARTER		-------	-------	2	16018-MK3-771	2536555
3	ROD SET A, STARTER LINK		-------	-------	2	16019-MB6-671	1752518
4	JOINT SET C, FUEL		-------	-------	1	16022-MB1-771	1313964
5	LINK SET B, STARTER		-------	-------	1	16025-MB4-671	1390327
6	JOINT SET A, FUEL	AC	-------	-------	1	16026-KE7-003	1761832
7	JOINT SET A, FUEL		-------	-------	1	16026-MB0-671	1241827
8	SCREW SET B		-------	-------	1	16028-KR3-671	2039949
	SCREW SET B		-------	-------	1	16028-MB0-671	1241835
9	LINK SET C, STARTER		-------	-------	1	16031-MB0-671	1241850
10	ROD SET B, STARTER LINK		-------	-------	1	16032-MB4-671	1390343
11	PLATE SET, STAY		-------	-------	1	16035-MB6-671	1752526
12	JOINT SET D, FUEL		-------	-------	1	16042-MB6-671	1752534
13	JOINT SET, FUEL	A	-------	-------	2	16047-KE7-003	1761840
		AC	-------	-------	1	16047-KE7-003	1761840
14	SCREW, PAN		-------	-------	8	16080-MB0-671	1241959
15	PLATE, SETTING		-------	-------	1	16094-MB2-671	1431790
16	CARBURETOR ASSY	A	-------	-------	1	16100-MB6-671	1748409
	CARBURETOR ASSY	AC	-------	-------	1	16100-MB6-881	1748417

SC15E ENGINE NO 2000043 TO 2009450
SC15E ENGINE NO 2000060 TO 2010776

VF1000F 84

BLOCK NO. E-17

REF NO	DESCRIPTION	AREA CODE	SERIAL NUMBER FROM	SERIAL NUMBER TO	QTY REQ	PART NUMBER	HONDA CODE
16	CARBURETOR ASSY	AC	-------	-------	1	16100-MB6-882	1976919
17	CARBURETOR ASSY, 1	A	-------	-------	1	16101-MB6-671	1752559
	CARBURETOR ASSY, 1	A	-------	-------	1	16101-MB6-672	2247096
	CARBURETOR ASSY, 1	AC	-------	-------	1	16101-MB6-881	1752567
18	CARBURETOR ASSY, 2	A	-------	-------	1	16102-MB6-671	1752575
	CARBURETOR ASSY, 2	A	-------	-------	1	16102-MB6-672	2247104
	CARBURETOR ASSY, 2	AC	-------	-------	1	16102-MB6-881	1752583
19	CARBURETOR ASSY, 3	A	-------	-------	1	16103-MB6-671	1752591
	CARBURETOR ASSY, 3	A	-------	-------	1	16103-MB6-672	2288363
	CARBURETOR ASSY, 3	AC	-------	-------	1	16103-MB6-881	1752609
20	CARBURETOR ASSY, 4	A	-------	-------	1	16104-MB6-671	1752617
	CARBURETOR ASSY, 4	A	-------	-------	1	16104-MB6-672	2931541
	CARBURETOR ASSY, 4	AC	-------	-------	1	16104-MB6-881	1752625
21	FUNNEL, AIR		-------	-------	4	16141-MB4-671	1390392
22	TUBE, FUEL	AC	-------	-------	1	16143-MB5-881	1806660
23	PIN, KNOCK		-------	-------	8	16178-MB0-671	1244177
24	BASE, AIR CLEANER	A	-------	-------	1	16188-MB6-601	1752633
	BASE, AIR CLEANER	AC	-------	-------	1	16188-MB6-881	1776657
25	TUBE, AIR VENT	AC	-------	-------	1	16199-MB4-621	1426097
26	TUBE	AC	-------	-------	1	16199-MB6-881	1761873
27	JOINT, VACUUM TUBE (C)	AC	-------	-------	1	17203-MG9-640	1524016
28	VALVE ASSY., AIR VENT CONTROL	AC	-------	-------	1	17300-MB3-880	1741677
29	TUBE, PB	AC	-------	-------	1	17310-MB6-880	1781236
30	VALVE COMP., PURGE CONTROL	AC	-------	-------	1	17440-MB3-880	1741743
31	RUBBER, PURGE CONTROL VALVE MOUNTING	AC	-------	-------	1	17451-ME5-760	1557156
32	SCREW-WASHER, 4X10		-------	-------	1	93892-04010-00	0962985
33	SCREW-WASHER, 4X14		-------	-------	1	93892-04014-00	0692046
34	SCREW-WASHER, 5X8		-------	-------	1	93892-05008-08	0791335
35	SCREW-WASHER, 5X12	A	-------	-------	1	93892-05012-00	0691808
		AC	-------	-------	2	93892-05012-00	0691808
36	TUBE, FUEL, 3.5X170 (BULK HOSE: 95001-35003-40M)	AC	-------	-------	1	95001-35170-40	0451526
37	TUBE, FUEL, 4.5X80	AC	-------	-------	1	95001-45080-40	0469858
38	TUBE, FUEL, 4.5X180 (BULK HOSE: 95001-45008-40M)	AC	-------	-------	1	95001-45180-40	0344929
39	CLIP B7, TUBE	AC	-------	-------	2	95002-02070	0250639
40	CLIP B8, TUBE	AC	-------	-------	4	95002-02080	0250647
41	CLIP B10, TUBE	AC	-------	-------	2	95002-02100	0250985
42	CLIP B12, TUBE	AC	-------	-------	4	95002-02120	0335034

CONTENTS

TITLE	GRID
AIR CLEANER	1-E7
ALTERNATOR	1-B8
BATTERY	1-E5
BRAKE CALIPER, FR	1-D10
BRAKE CALIPER, RR	1-E1
BRAKE MASTER CYL. FR	1-D4
BRAKE MASTER CYL. RR	1-D12
CAM CHAIN	1-B5
CAMSHAFT	1-B4
CANISTER (AC)	1-F11
CARBURETOR (ASSY.)	1-C7
CARBURETOR COMPONENTS	1-C8
CHAIN CASE	1-E11
CLUTCH	1-D3
CLUTCH	1-B6
CLUTCH MASTER CYLINDER	1-D5
CONTROL SWITCHES	1-D3
COWL	1-F8
COWL, RR	1-E4
CRANKCASE COVER, L	1-B9
CRANKCASE COVER, R	1-B6
CRANKSHAFT	1-C2
CYLINDER BLOCK	1-B12
CYLINDER HEAD COVER	1-B1
CYLINDER HEAD, FR	1-B1
CYLINDER HEAD, RR	1-B3
FENDER, FR	1-D7
FENDER, RR	1-F1
FRAME BODY	1-F6
FUEL PUMP	1-E6
FUEL TANK	1-E3
GASKET KIT A	1-C9
GASKET KIT B	1-C9
GEARSHIFT DRUM	1-C5
HANDLEBAR	1-D6
HEADLIGHT	1-D1
IGNITION COIL	1-F4
INSTRUMENTS	1-D2
MARK	1-F10
MUFFLER, EXHAUST	1-E8
OIL FILTER	1-B11
OIL PAN	1-B11
OIL PUMP	1-B11
PEDAL, BRAKE	1-E9
PEDAL, GEARSHIFT	1-E9
PISTON	1-C2
PULSE GENERATOR	1-B7
RADIATOR	1-F5
SEAT	1-E4
SHOCK ABSORBER, FR	1-D8
SHOCK ABSORBER, RR	1-E12
SIDE COVER	1-E5
SPARK UNIT	1-F1
STAND	1-E10
STARTER CLUTCH	1-B7
STARTER MOTOR	1-B11
STEERING STEM	1-D7
STEP	1-E9
STRIPE	1-F10
SWINGARM	1-E11
TAILLIGHT	1-F3
TENSIONER	1-B5
THERMOSTAT	1-C6
TOOLS	1-F8
TOP BRIDGE	1-D6
TRANSMISSION	1-C4
TURN SIGNAL	1-F2
VALVE	1-B4
WATER PIPE	1-C6
WATER PUMP	1-B9
WHEEL, FR	1-D11
WHEEL, RR	1-E2
WIRE HARNESS	1-F4

GRID NO.

CARBURETOR • (COMPONENT PARTS)

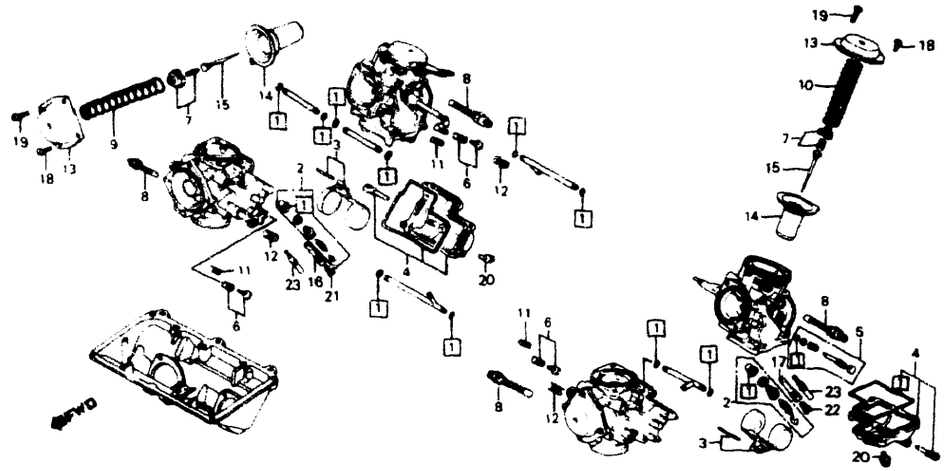

VF1000F 84

G43 BMB2-52

BLOCK NO. E-17-1

REF NO	DESCRIPTION	AREA CODE	SERIAL NUMBER FROM	SERIAL NUMBER TO	QTY REQ	PART NUMBER	HONDA CODE
1	GASKET SET	A	-------	-------	4	16010-MB0-671	1241736
	GASKET SET	A	-------	-------	4	16010-MB0-871	3516416
	GASKET SET	AC	-------	-------	4	16010-MB4-621	1426014
	GASKET SET	AC	-------	-------	4	16010-MB4-622	2249340
	GASKET SET	AC	-------	-------	4	16010-MB6-681	2076362
2	VALVE SET, FLOAT		-------	-------	4	16011-MB0-671	1241744
	VALVE SET, FLOAT		-------	-------	4	16011-MR6-671	2825776
3	FLOAT SET		-------	-------	4	16013-MB0-671	1241751
4	CHAMBER SET, FLOAT		-------	-------	4	16015-MB0-671	1241769
5	SCREW SET A		-------	-------	4	16016-M55-671	1438027
6	SCREW SET C		-------	-------	3	16029-MB0-671	1241843
7	PLATE SET, VALVE		-------	-------	4	16037-MB4-671	1390459
8	VALVE SET, STARTER		-------	-------	4	16046-MA6-003	1241892
9	SPRING, FR VACUUM PISTON		-------	-------	2	16050-MB4-671	1390442
10	SPRING, RR VACUUM PISTON		-------	-------	2	16051-MB4-671	1390475
11	SPRING		-------	-------	3	16052-MB0-671	1241934
12	SPRING		-------	-------	3	16053-MB0-671	1241942
13	TOP COMP		-------	-------	4	16107-MB4-671	1390483
	TOP COMP		-------	-------	4	16107-ME9-671	1402734
14	PISTON COMP., VACUUM	A	-------	-------	4	16111-MB6-601	1741487

1-C 8

SC15E ENGINE NO 2000043 TO 2009450
SC15E ENGINE NO 2000060 TO 2010776

VF1000F 84

BLOCK NO. E-17-1

REF NO	DESCRIPTION	AREA CODE	SERIAL NUMBER FROM	SERIAL NUMBER TO	QTY REQ	PART NUMBER	HONDA CODE
14	PISTON COMP., VACUUM	AC	-------	2008769	4	16111-MB6-881	1761857
	PISTON COMP., VACUUM	AC	2008770	-------	4	16112-MB6-881	2032670
15	NEEDLE, FR. JET	AC	-------	2008769	4	16131-MB0-701	1781103
	NEEDLE, FR. JET	A	-------	-------	4	16131-MB4-671	1390467
	NEEDLE, RR. JET	AC	-------	2008769	4	16151-MB0-771	1317098
	JET, NEEDLE	AC	2008770	-------	4	16151-MB6-881	2032688
16	HOLDER, JET NEEDLE		-------	-------	2	16165-MB0-771	1318997
17	HOLDER, JET NEEDLE		-------	-------	2	16165-MB6-781	1761865
18	SCREW, PAN, 4X10		-------	-------	14	93500-04010-0A	0188359
19	SCREW, PAN, 4X12		-------	-------	2	93500-04012-0A	0169466
20	SCREW-WASHER, 4X16		-------	-------	16	93892-04016-00	0692053
21	JET, MAIN, #112	AC	-------	-------	2	99101-393-1120	1432624
	JET, MAIN, #150	A	-------	-------	2	99101-393-1500	0934372
22	JET, MAIN (#110)	AC	-------	2008769	2	99101-393-1100	0644955
	JET, MAIN (#115)	AC	2008770	-------	2	99101-393-1150	0477455
	JET, MAIN (#145)	A	-------	-------	2	99101-393-1450	0912162
	JET, SECONDARY MAIN (#110)	AC	-------	2008769	2	99102-393-1100	0631028
	JET, SECONDARY MAIN (#115)	AC	2008770	-------	2	99102-393-1150	0830422
	JET, PRIMARY MAIN, #145	A	-------	-------	2	99102-393-1450	1762319
23	JET, SLOW, #38		-------	-------	4	99103-437-0380	1244029

CONTENTS

TITLE	GRID
AIR CLEANER	1-E7
ALTERNATOR	1-B8
BATTERY	1-E5
BRAKE CALIPER, FR	1-D10
BRAKE CALIPER, RR	1-E1
BRAKE MASTER CYL. FR	1-D4
BRAKE MASTER CYL. RR	1-D12
CAM CHAIN	1-B5
CAMSHAFT	1-B4
CANISTER (AC)	1-F11
CARBURETOR (ASSY.)	1-C7
CARBURETOR COMPONENTS	1-C8
CHAIN CASE	1-E11
CLUTCH	1-D3
CLUTCH	1-B6
CLUTCH MASTER CYLINDER	1-D5
CONTROL SWITCHES	1-D3
COWL	1-F8
COWL, RR	1-E4
CRANKCASE COVER, L	1-B9
CRANKCASE COVER, R	1-B6
CRANKSHAFT	1-C2
CYLINDER BLOCK	1-B12
CYLINDER HEAD COVER	1-B1
CYLINDER HEAD, FR	1-B1
CYLINDER HEAD, RR	1-B3
FENDER, FR	1-D7
FENDER, RR	1-F1
FRAME BODY	1-F6
FUEL PUMP	1-E6
FUEL TANK	1-E3
GASKET KIT A	1-C9
GASKET KIT B	1-C9
GEARSHIFT DRUM	1-C5
HANDLEBAR	1-D6
HEADLIGHT	1-D1
IGNITION COIL	1-F4
INSTRUMENTS	1-D2
MARK	1-F10
MUFFLER, EXHAUST	1-E8
OIL FILTER	1-B11
OIL PAN	1-B11
OIL PUMP	1-B11
PEDAL, BRAKE	1-E9
PEDAL, GEARSHIFT	1-E9
PISTON	1-C2
PULSE GENERATOR	1-B7
RADIATOR	1-F5
SEAT	1-E4
SHOCK ABSORBER, FR	1-D8
SHOCK ABSORBER RR	1-E12
SIDE COVER	1-E5
SPARK UNIT	1-F1
STAND	1-E10
STARTER CLUTCH	1-B7
STARTER MOTOR	1-B11
STEERING STEM	1-D7
STEP	1-E9
STRIPE	1-F10
SWINGARM	1-E11
TAILLIGHT	1-F3
TENSIONER	1-B5
THERMOSTAT	1-C6
TOOLS	1-F8
TOP BRIDGE	1-D6
TRANSMISSION	1-C4
TURN SIGNAL	1-F2
VALVE	1-B4
WATER PIPE	1-C6
WATER PUMP	1-B9
WHEEL, FR	1-D11
WHEEL, RR	1-E2
WIRE HARNESS	1-F4

GRID NO.

1-C 8

GASKET KIT A

NO ILLUSTRATION

VF1000F '84

NOILL — BLOCK NO. EOP-1

REF NO	DESCRIPTION	AREA CODE	SERIAL NUMBER FROM	SERIAL NUMBER TO	QTY REQ	PART NUMBER	HONDA CODE
1	GASKET KIT A		-------	-------	1	061A1-MB6-010	1881028
	SEAL, VALVE STEM		-------	-------	16	12209-422-005	0688887
2	GASKET, CYLINDER HEAD		-------	-------	2	12251-MB6-000	1748060
	GASKET, CYLINDER HEAD		-------	-------	2	12251-MB6-010	1880301
	GASKET, CYLINDER HEAD		-------	-------	2	12251-MB6-020	2275907
	GASKET, CYLINDER HEAD		-------	-------	2	12251-MB6-030	2396810
3	GASKET, HEAD COVER		-------	-------	2	12391-MB6-000	1748128
4	GASKET, EX. PIPE		-------	-------	4	18291-MN4-920	2916997
	GASKET, EX. PIPE		-------	-------	4	18291-236-000	0148593
5	WASHER, OIL BOLT		-------	-------	6	90545-300-000	0189902
6	O-RING, 21.5X2		-------	-------	8	91310-KE8-003	1425602

SC15E ENGINE NO. 2000043 TO 2009450
SC15E ENGINE NO. 2000060 TO 2010776

GASKET KIT B

NO ILLUSTRATION

VF1000F '84

NOILL — BLOCK NO. EOP-2

REF NO	DESCRIPTION	AREA CODE	SERIAL NUMBER FROM	SERIAL NUMBER TO	QTY REQ	PART NUMBER	HONDA CODE
1	GASKET KIT B		-------	-------	1	061B1-MB6-000	1799162
	GASKET, OIL PAN		-------	-------	1	11315-MB0-010	1441724
2	GASKET, R. COVER		-------	-------	1	11394-MB0-000	1240860
3	GASKET, ALTERNATOR COVER		-------	-------	1	11636-MB0-000	1240886
4	GASKET, INDICATOR SWITCH COVER		-------	-------	1	11642-MB0-000	1240902
5	GASKET, L. INNER COVER		-------	-------	1	11666-MB2-000	1426394
6	GASKET, WATER PUMP COVER		-------	-------	1	19226-MB6-000	1748896
7	GASKET, CONNECTING CAP		-------	-------	2	91301-MB0-000	1243880
8	O-RING, 32.95X2.62		-------	-------	1	91302-MB0-013	1435114
9	O-RING, 21.9X2.3		-------	-------	2	91301-MB6-003	2954766
	O-RING, 21.9X2.5		-------	-------	2	91302-371-013	1541390
	O-RING, 21.9X2.3		-------	-------	2	91302-371-023	2458644
10	O-RING, 10.6X20.6X2.5 (ARAI)		-------	-------	1	91303-MB2-003	1431402
	O-RING, 10.6X20.6X2.5 (NIPPON)		-------	-------	1	91303-MB2-004	1494939
11	O-RING, 9.8X2.4		-------	-------	1	91305-422-000	0688986
12	O-RING, 54X2		-------	-------	2	91307-MB0-003	1260827
13	O-RING, 21.5X3.2		-------	-------	1	91307-425-003	1216126
14	O-RING, 5.7X2.2 (ARAI)		-------	-------	1	91308-MB0-003	1260835
15	O-RING, 14.6X3.7 (ARAI)		-------	-------	2	91309-MB0-003	1260843
16	O-RING, 18.5X2.4 (ARAI)		-------	-------	1	91311-MB0-003	1260850

CONTENTS

TITLE	GRID
AIR CLEANER	1-E7
ALTERNATOR	1-B8
BATTERY	1-E5
BRAKE CALIPER, FR	1-D10
BRAKE CALIPER, RR	1-E1
BRAKE MASTER CYL. FR	1-D4
BRAKE MASTER CYL. RR	1-D12
CAM CHAIN	1-B5
CAMSHAFT	1-B4
CANISTER (AC)	1-F11
CARBURETOR (ASSY.)	1-C7
CARBURETOR COMPONENTS	1-C8
CHAIN CASE	1-E11
CLUTCH	1-D3
CLUTCH	1-B6
CLUTCH MASTER CYLINDER	1-D5
CONTROL SWITCHES	1-D3
COWL	1-F8
COWL, RR	1-E4
CRANKCASE COVER, L	1-B9
CRANKCASE COVER, R	1-B6
CRANKSHAFT	1-C2
CYLINDER BLOCK	1-B12
CYLINDER HEAD COVER	1-B1
CYLINDER HEAD, FR	1-B1
CYLINDER HEAD, RR	1-B3
FENDER, FR	1-D7
FENDER, RR	1-F1
FRAME BODY	1-F6
FUEL PUMP	1-E6
FUEL TANK	1-E3
GASKET KIT A	1-C9
GASKET KIT B	1-C9
GEARSHIFT DRUM	1-C5
HANDLEBAR	1-D6
HEADLIGHT	1-D1
IGNITION COIL	1-F4
INSTRUMENTS	1-D2
MARK	1-F10
MUFFLER, EXHAUST	1-E8
OIL FILTER	1-B11
OIL PAN	1-B11
OIL PUMP	1-B11
PEDAL, BRAKE	1-E9
PEDAL, GEARSHIFT	1-E9
PISTON	1-C2
PULSE GENERATOR	1-B7
RADIATOR	1-F5
SEAT	1-E4
SHOCK ABSORBER, FR	1-D8
SHOCK ABSORBER, RR	1-E12
SIDE COVER	1-E5
SPARK UNIT	1-F1
STAND	1-E10
STARTER CLUTCH	1-B7
STARTER MOTOR	1-B11
STEERING STEM	1-D7
STEP	1-E9
STRIPE	1-F10
SWINGARM	1-E11
TAILLIGHT	1-F3
TENSIONER	1-B5
THERMOSTAT	1-C6
TOOLS	1-F8
TOP BRIDGE	1-D6
TRANSMISSION	1-C4
TURN SIGNAL	1-F2
VALVE	1-B4
WATER PIPE	1-C6
WATER PUMP	1-B9
WHEEL, FR	1-D11
WHEEL, RR	1-E2
WIRE HARNESS	1-F4

GRID NO.

1-C 9

GASKET KIT B

NO ILLUSTRATION

VF1000F '84

NOILL — BLOCK NO. EOP-2

REF NO	DESCRIPTION	AREA CODE	SERIAL NUMBER FROM	SERIAL NUMBER TO	QTY REQ	PART NUMBER	HONDA CODE
17	O-RING, 14.7X2.2		-------	-------	1	91313-MB0-003	1260868
	O-RING, 14.7X2.2		-------	-------	1	91313-MG7-004	3353620
18	O-RING, 7.8X2.2		-------	-------	1	91308-283-000	0076497
	O-RING, 7.8X2.2		-------	-------	1	91313-393-003	0446922
19	O-RING, 18X2.8		-------	-------	1	91314-MB0-003	1260876
20	GASKET, DRAIN PLUG		-------	-------	1	94109-12000	0171868

SC15E ENGINE NO 2000043 TO 2009450
SC15E ENGINE NO 2000060 TO 2010776

INTENTIONALLY LEFT BLANK

CONTENTS

TITLE	GRID
AIR CLEANER	1-E7
ALTERNATOR	1-B8
BATTERY	1-E5
BRAKE CALIPER, FR	1-D10
BRAKE CALIPER, RR	1-E1
BRAKE MASTER CYL, FR	1-D4
BRAKE MASTER CYL, RR	1-D12
CAM CHAIN	1-B5
CAMSHAFT	1-B4
CANISTER (AC)	1-F11
CARBURETOR (ASSY.)	1-C7
CARBURETOR COMPONENTS	1-C8
CHAIN CASE	1-E11
CLUTCH	1-D3
CLUTCH	1-B6
CLUTCH MASTER CYLINDER	1-D5
CONTROL SWITCHES	1-D3
COWL	1-F9
COWL, RR	1-E4
CRANKCASE COVER, L	1-B9
CRANKCASE COVER, R	1-B6
CRANKSHAFT	1-C2
CYLINDER BLOCK	1-B12
CYLINDER HEAD COVER	1-B1
CYLINDER HEAD, FR	1-B1
CYLINDER HEAD, RR	1-B3
FENDER, FR	1-D7
FENDER, RR	1-F1
FRAME BODY	1-F6
FUEL PUMP	1-E6
FUEL TANK	1-E3
GASKET KIT A	1-C9
GASKET KIT B	1-C9
GEARSHIFT DRUM	1-C5
HANDLEBAR	1-D6
HEADLIGHT	1-D1
IGNITION COIL	1-F4
INSTRUMENTS	1-D2
MARK	1-F10
MUFFLER, EXHAUST	1-E8
OIL FILTER	1-B11
OIL PAN	1-B11
OIL PUMP	1-B11
PEDAL, BRAKE	1-E9
PEDAL, GEARSHIFT	1-E9
PISTON	1-C2
PULSE GENERATOR	1-B7
RADIATOR	1-F5
SEAT	1-E4
SHOCK ABSORBER, FR	1-D8
SHOCK ABSORBER, RR	1-E12
SIDE COVER	1-E5
SPARK UNIT	1-F1
STAND	1-E10
STARTER CLUTCH	1-B7
STARTER MOTOR	1-B11
STEERING STEM	1-D7
STEP	1-E5
STRIPE	1-F10
SWINGARM	1-E11
TAILLIGHT	1-F3
TENSIONER	1-B5
THERMOSTAT	1-C6
TOOLS	1-F8
TOP BRIDGE	1-D6
TRANSMISSION	1-C4
TURN SIGNAL	1-F2
VALVE	1-B4
WATER PIPE	1-C6
WATER PUMP	1-B9
WHEEL, FR	1-D11
WHEEL, RR	1-E2
WIRE HARNESS	1-F4

GRID NO.

1-C 10

HEADLIGHT

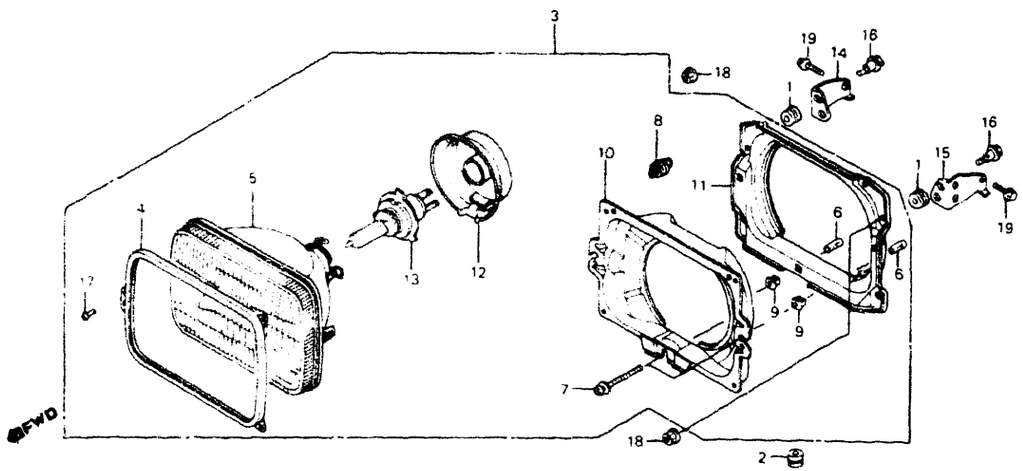

VF1000F 84

G43 BMB6-1b

BLOCK NO F-1

REF NO	DESCRIPTION	AREA CODE	SERIAL NUMBER FROM	SERIAL NUMBER TO	QTY REQ	PART NUMBER	HONDA CODE
1	RUBBER AIR CLEANER CASE MOUNTING		-------	-------	2	17245-107-010	0213462
2	GROMMET RADIATOR		-------	-------	1	19053-MB2-000	1427889
3	HEADLIGHT ASSY		-------	-------	1	33100-MB6-671	1749357
4	RING RETAINING		-------	-------	1	33102-692-671	0773309
5	HEADLIGHT UNIT		-------	-------	1	33120-MB0-771	1437144
6	TUBE SCREW		-------	-------	2	33136-MB2-000	1464304
7	SCREW ADJUSTING (STANLEY)		-------	-------	2	33143-692-672	1045871
8	SPRING ADJUSTING (STANLEY)		-------	-------	1	33144-692-671	0773341
9	NUT NYLON CAP		-------	-------	2	33145-657-671	0577973
10	RING MOUNTING (1)		-------	-------	1	33150-MB6-671	1749373
11	RING MOUNTING (2)		-------	-------	1	33154-MB6-671	1749381
12	COVER RUBBER		-------	-------	1	33112-MM9-013	3338795
	COVER RUBBER		-------	-------	1	33180-MC5-003	1305960
13	BULB HEADLIGHT (H4 JA12V60/55W)		-------	-------	1	34901-MC7-601	1288612
14	STAY R HEADLIGHT		-------	-------	1	61501-MB6-000	1750066
15	STAY L HEADLIGHT		-------	-------	1	61502-MB6-000	1750074
16	BOLT FLANGE 6X24		-------	-------	2	90114-170-000	1706001
17	SCREW PAN 4X8		-------	-------	3	90162-692-003	0786418

SC150* FRAME NO EM000017 TO EM003753
SC151* FRAME NO EM000003 TO EM000627

VF1000F 84

BLOCK NO F-1

REF NO	DESCRIPTION	AREA CODE	SERIAL NUMBER FROM	SERIAL NUMBER TO	QTY REQ	PART NUMBER	HONDA CODE
17	SCREW PAN 4X8		-------	-------	3	90162-692-013	3460839
18	NUT FLANGE 6MM		-------	-------	2	94050-06000	0471623
19	BOLT FLANGE 6X10		-------	-------	2	95700-06010-08	0344952
	BOLT FLANGE 6X10		-------	-------	2	95701-06010-08	2204709

CONTENTS

TITLE	GRID
AIR CLEANER	1-E7
ALTERNATOR	1-B8
BATTERY	1-E5
BRAKE CALIPER FR	1-D10
BRAKE CALIPER RR	1-E1
BRAKE MASTER CYL FR	1-D4
BRAKE MASTER CYL RR	1-D12
CAM CHAIN	1-B5
CAMSHAFT	1-B4
CANISTER (AC)	1-F11
CARBURETOR (ASSY)	1-C7
CARBURETOR COMPONENTS	1-C8
CHAIN CASE	1-E11
CLUTCH	1-D3
CLUTCH	1-B6
CLUTCH MASTER CYLINDER	1-D5
CONTROL SWITCHES	1-D3
COWL	1-F8
COWL RR	1-E4
CRANKCASE COVER L	1-B9
CRANKCASE COVER R	1-B6
CRANKSHAFT	1-C2
CYLINDER BLOCK	1-B12
CYLINDER HEAD COVER	1-B1
CYLINDER HEAD FR	1-B1
CYLINDER HEAD RR	1-B3
FENDER FR	1-D7
FENDER RR	1-F1
FRAME BODY	1-F6
FUEL PUMP	1-E6
FUEL TANK	1-E3
GASKET KIT A	1-C9
GASKET KIT B	1-C9
GEARSHIFT DRUM	1-C5
HANDLEBAR	1-D6
HEADLIGHT	1-D1
IGNITION COIL	1-F4
INSTRUMENTS	1-D2
MARK	1-F10
MUFFLER EXHAUST	1-E8
OIL FILTER	1-B11
OIL PAN	1-B11
OIL PUMP	1-B11
PEDAL BRAKE	1-E9
PEDAL GEARSHIFT	1-E9
PISTON	1-C2
PULSE GENERATOR	1-B7
RADIATOR	1-F5
SEAT	1-E4
SHOCK ABSORBER FR	1-D8
SHOCK ABSORBER RR	1-E12
SIDE COVER	1-E5
SPARK UNIT	1-F1
STAND	1-E10
STARTER CLUTCH	1-L7
STARTER MOTOR	1-B11
STEERING STEM	1-D7
STEP	1-E9
STRIPE	1-F10
SWINGARM	1-E11
TAILLIGHT	1-F3
TENSIONER	1-B5
THERMOSTAT	1-C6
TOOLS	1-F8
TOP BRIDGE	1-D6
TRANSMISSION	1-C4
TURN SIGNAL	1-F2
VALVE	1-B4
WATER PIPE	1-C6
WATER PUMP	1-B9
WHEEL FR	1-D11
WHEEL RR	1-E2
WIRE HARNESS	1-F4

GRID NO.

1-D 1

INSTRUMENTS

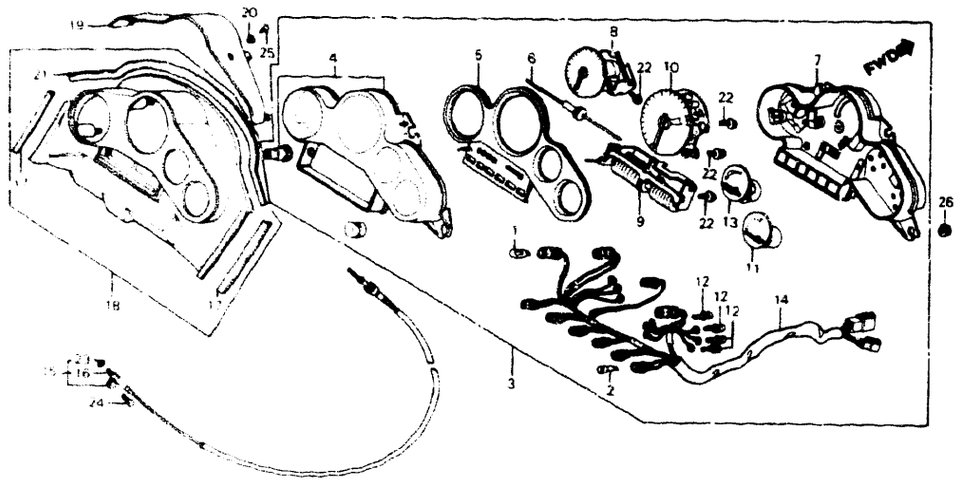

VF1000F '84

G43-BMB6 20

BLOCK NO. F-2

REF NO	DESCRIPTION	AREA CODE	SERIAL NUMBER FROM	SERIAL NUMBER TO	QTY REQ	PART NUMBER	HONDA CODE
1	BULB, WEDGE BASE (12V3 4W)		-------	-------	4	34908-GA7-701	1084672
	BULB, WEDGE BASE (12V 3 4W)		-------	-------	4	37102-567-009	0846436
	BULB, WEDGE BASE (12V 3 4W)		-------	-------	4	37237-SA5-003	1294925
	BULB, WEDGE BASE (12V 3 4W)		-------	-------	4	37237-SA5-004	1294966
2	BULB, WEDGE BASE (12V/3W)		-------	-------	6	34908-MB0-003	1260611
3	METER ASSY., COMBINATION		-------	-------	1	37100-MB6-671	1749589
4	LENS COMP., COMBINATION METER		-------	-------	1	37102-MB6-008	1754019
5	PLATE, REFLECTING		-------	-------	1	37103-MB6-008	1754027
6	COUNTERSHAFT COMP		-------	-------	1	37104-MB6-008	1754035
7	CASE COMP., METER		-------	-------	1	37120-MB6-008	1754043
8	SPEEDOMETER ASSY		-------	-------	1	37200-MB6-671	1749605
9	COUNTER ASSY		-------	-------	1	37210-MB6-008	1754068
10	TACHOMETER ASSY		-------	-------	1	37250-MB6-008	1749621
11	METER ASSY., FUEL		-------	-------	1	37300-MB6-008	1754076
12	SCREW WASHER, 3X22		-------	-------	6	37305-KE5-008	1691245
13	METER ASSY., TEMPERATURE		-------	-------	1	37400-MB6-008	1754084
14	SOCKET COMP		-------	-------	1	37612-MB6-008	1754092
15	CABLE ASSY., SPEEDOMETER		-------	-------	1	44830-MB6-000	1754266
16	CABLE, INNER		-------	-------	1	44831-MB6-000	2028991
17	RUBBER, METER VISOR		-------	-------	2	64101-MB6-000	1750082

SC150* FRAME NO. EM000617 TO EM003753
SC151* FRAME NO. EM000003 TO EM000627

VF1000F '84

BLOCK NO. F-2

REF NO	DESCRIPTION	AREA CODE	SERIAL NUMBER FROM	SERIAL NUMBER TO	QTY REQ	PART NUMBER	HONDA CODE
18	VISOR, METER		-------	-------	1	64120-MB6-000	1750157
	VISOR, METER		-------	-------	1	64120-MB6-020	2036135
19	HOOD, METER		-------	-------	1	64125-MB6-010	2036184
20	COLLAR, HOOD SETTING		-------	-------	2	64126-MB6-000	1754886
21	RUBBER, SCREEN SEAL		-------	-------	1	64201-MB6-000	1750173
22	SCREW-WASHER, 4X10		-------	-------	6	90101-GG2-008	1691302
23	O-RING, 6.8X1.9		-------	-------	1	91301-027-000	0018044
	O-RING, 6.8X1.9		-------	-------	1	91306-PJ4-000	2373447
	O-RING B, 6.8X1.9		-------	-------	1	91310-MC7-003	1218569
24	SCREW, OVAL, 5X20		-------	-------	1	93700-05020-0G	0768721
25	SCREW, TAPPING, 4X16		-------	-------	2	93903-44480	1806967
26	NUT, FLANGE, 6MM		-------	-------	4	94050-06080	0612689

CONTENTS

TITLE	GRID
AIR CLEANER	1-E7
ALTERNATOR	1-B8
BATTERY	1-E5
BRAKE CALIPER, FR	1-D10
BRAKE CALIPER, RR	1-E1
BRAKE MASTER CYL., FR	1-D4
BRAKE MASTER CYL., RR	1-D12
CAM CHAIN	1-B5
CAMSHAFT	1-B4
CANISTER (AC)	1-F11
CARBURETOR (ASSY.)	1-C7
CARBURETOR COMPONENTS	1-C8
CHAIN CASE	1-E11
CLUTCH	1-D3
CLUTCH	1-B6
CLUTCH MASTER CYLINDER	1-D5
CONTROL SWITCHES	1-D3
COWL	1-F8
COWL, RR	1-E4
CRANKCASE COVER, L	1-B9
CRANKCASE COVER, R	1-B6
CRANKSHAFT	1-C2
CYLINDER BLOCK	1-B12
CYLINDER HEAD COVER	1-B1
CYLINDER HEAD, FR	1-B1
CYLINDER HEAD, RR	1-B3
FENDER, FR	1-D7
FENDER, RR	1-F1
FRAME BODY	1-F6
FUEL PUMP	1-E6
FUEL TANK	1-E3
GASKET KIT A	1-C9
GASKET KIT B	1-C9
GEARSHIFT DRUM	1-C5
HANDLEBAR	1-D6
HEADLIGHT	1-D1
IGNITION COIL	1-F4
INSTRUMENTS	1-D2
MARK	1-F10
MUFFLER, EXHAUST	1-E8
OIL FILTER	1-B11
OIL PAN	1-B11
OIL PUMP	1-B11
PEDAL, BRAKE	1-E9
PEDAL, GEARSHIFT	1-E9
PISTON	1-C2
PULSE GENERATOR	1-B7
RADIATOR	1-F5
SEAT	1-E4
SHOCK ABSORBER, FR	1-D8
SHOCK ABSORBER, RR	1-E12
SIDE COVER	1-E5
SPARK UNIT	1-F1
STAND	1-E10
STARTER CLUTCH	1-B7
STARTER MOTOR	1-B11
STEERING STEM	1-D7
STEP	1-E9
STRIPE	1-F10
SWINGARM	1-E11
TAILLIGHT	1-F3
TENSIONER	1-B5
THERMOSTAT	1-C6
TOOLS	1-F8
TOP BRIDGE	1-D6
TRANSMISSION	1-C4
TURN SIGNAL	1-F2
VALVE	1-B4
WATER PIPE	1-C6
WATER PUMP	1-B9
WHEEL, FR	1-D11
WHEEL, RR	1-E2
WIRE HARNESS	1-F4

GRID NO.

1-D 2

CONTROL SWITCHES • CLUTCH

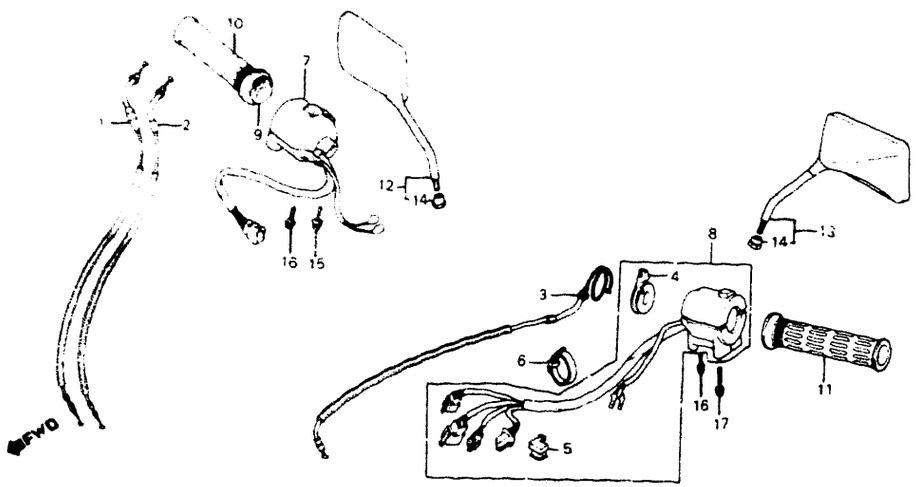

VF1000F 84

G43-BMB6-51

BLOCK NO F-3

REF NO	DESCRIPTION	AREA CODE	SERIAL NUMBER FROM	TO	QTY REQ	PART NUMBER	HONDA CODE
1	CABLE COMP A THROTTLE		-------	-------	1	17910-MB6-000	1752930
	CABLE COMP A THROTTLE		-------	-------	1	17910-MB6-010	1853647
	CABLE COMP A THROTTLE		-------	-------	1	17910-MB6-020	2011864
2	CABLE COMP B THROTTLE		-------	-------	1	17920-MB6-000	1752955
	CABLE COMP B THROTTLE		-------	-------	1	17920-MB6-010	1853654
	CABLE COMP B THROTTLE		-------	-------	1	17920-MB6-020	1984269
3	CABLE COMP CHOKE		-------	-------	1	17950-MB6-000	1748649
4	LEVER CHOKE		-------	-------	1	17962-KE8-700	1669324
	LEVER CHOKE		-------	-------	1	17962-KE8-701	1741313
5	COVER HEADLIGHT SOCKET		-------	-------	1	32106-KE1-600	1592351
6	BAND B1 CABLE		-------	-------	1	32161-404-000	0468819
7	SWITCH ASSY STARTER/KILL		-------	-------	1	35130-MB6-670	1749563
8	SWITCH ASSY TURN SIGNAL		-------	-------	1	35200-MB6-670	1749571
	SWITCH ASSY TURN SIGNAL		-------	-------	1	35200-MB6-771	3394293
9	PIPE THROTTLE GRIP		-------	-------	1	53141-422-000	0692558
10	GRIP R HANDLEBAR		-------	-------	1	53165-422-000	0692566
11	GRIP L HANDLEBAR		-------	-------	1	53166-422-000	0692574
12	MIRROR R		-------	-------	1	88110-MB6-000	1750215
	MIRROR R		-------	-------	1	88110-MB6-010	2280451
13	MIRROR L		-------	-------	1	88120-MB6-000	1750223

SC150* FRAME NO EM000017 TO EM003753
SC151* FRAME NO EM000003 TO EM000627

VF1000F 84

BLOCK NO F-3

REF NO	DESCRIPTION	AREA CODE	SERIAL NUMBER FROM	TO	QTY REQ	PART NUMBER	HONDA CODE
13	MIRROR L		-------	-------	1	88120-MB6-010	2292571
14	NUT LOCK		-------	-------	2	90314-MB6-000	1755354
15	SCREW-WASHER 5X20		-------	-------	1	93892-05020-07	1078351
16	SCREW-WASHER 5X28		-------	-------	2	93892-05028-07	0692673
17	SCREW-WASHER 5X45		-------	-------	1	93892-05045-07	0692699

CONTENTS

TITLE	GRID
AIR CLEANER	1-E7
ALTERNATOR	1-B8
BATTERY	1-E5
BRAKE CALIPER FR	1-D10
BRAKE CALIPER RR	1-E1
BRAKE MASTER CYL FR	1-D4
BRAKE MASTER CYL RR	1-D12
CAM CHAIN	1-B5
CAMSHAFT	1-B4
CANISTER (AC)	1-F11
CARBURETOR (ASSY)	1-C7
CARBURETOR COMPONENTS	1-C8
CHAIN CASE	1-E11
CLUTCH	1-D3
CLUTCH	1-B6
CLUTCH MASTER CYLINDER	1-D5
CONTROL SWITCHES	1-D3
COWL	1-F8
COWL RR	1-E4
CRANKCASE COVER L	1-B9
CRANKCASE COVER R	1-B6
CRANKSHAFT	1-C2
CYLINDER BLOCK	1-B12
CYLINDER HEAD COVER	1-B1
CYLINDER HEAD FR	1-B1
CYLINDER HEAD RR	1-B3
FENDER FR	1-D7
FENDER RR	1-F1
FRAME BODY	1-F6
FUEL PUMP	1-E6
FUEL TANK	1-E3
GASKET KIT A	1-C9
GASKET KIT B	1-C9
GEARSHIFT DRUM	1-C5
HANDLEBAR	1-D6
HEADLIGHT	1-D1
IGNITION COIL	1-F4
INSTRUMENTS	1-D2
MARK	1-F10
MUFFLER EXHAUST	1-E8
OIL FILTER	1-B11
OIL PAN	1-B11
OIL PUMP	1-B11
PEDAL BRAKE	1-E9
PEDAL GEARSHIFT	1-E9
PISTON	1-C2
PULSE GENERATOR	1-B7
RADIATOR	1-F5
SEAT	1-E4
SHOCK ABSORBER FR	1-D8
SHOCK ABSORBER RR	1-E12
SIDE COVER	1-E5
SPARK UNIT	1-F1
STAND	1-E10
STARTER CLUTCH	1-B7
STARTER MOTOR	1-B11
STEERING STEM	1-D7
STEP	1-E9
STRIPE	1-F10
SWINGARM	1-E11
TAILLIGHT	1-F3
TENSIONER	1-B5
THERMOSTAT	1-C6
TOOLS	1-F8
TOP BRIDGE	1-D6
TRANSMISSION	1-C4
TURN SIGNAL	1-F2
VALVE	1-B4
WATER PIPE	1-C8
WATER PUMP	1-B9
WHEEL FR	1-D11
WHEEL RR	1-E2
WIRE HARNESS	1-F4

GRID NO.

FRONT BRAKE MASTER CYL

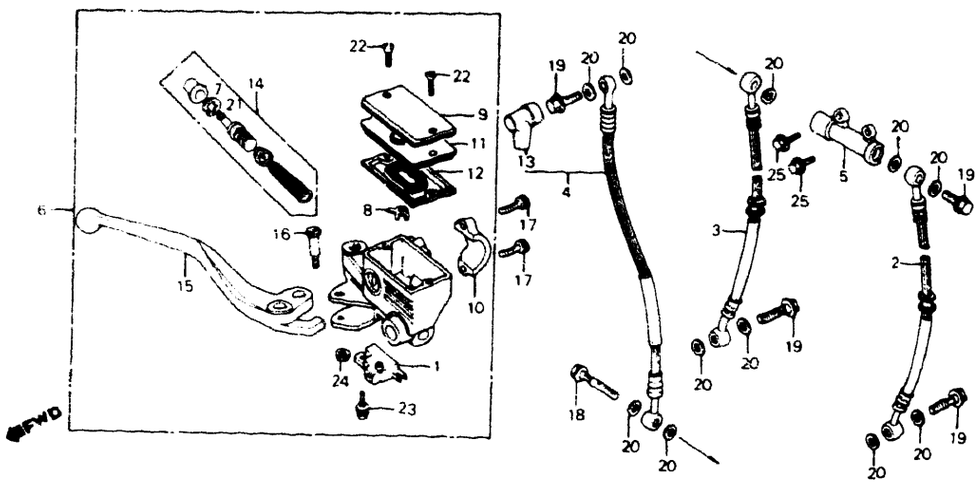

VF1000F 84

G43-BM88-22

BLOCK NO. F-4

REF NO	DESCRIPTION	AREA CODE	SERIAL NUMBER FROM	SERIAL NUMBER TO	QTY REQ	PART NUMBER	HONDA CODE
1	SWITCH ASSY FR STOP		-------	-------	1	35340-MA5-671	0952267
2	HOSE L FR BRAKE		-------	-------	1	45124-MB6-003	1754274
3	HOSE R FR BRAKE		-------	-------	1	45125-MB6-003	1754282
4	HOSE B FR BRAKE		-------	-------	1	45126-MB6-671	1754290
5	JOINT TWO WAY (NISSHIN)		-------	-------	1	45127-MA1-003	1054832
6	CYLINDER ASSY FR BRAKE MASTER		-------	-------	1	45500-MB4-673	1666874
7	BOOT COMP		-------	-------	1	45504-410-003	1211820
8	PROTECTOR		-------	-------	1	45512-MA6-006	1235688
9	CAP MASTER CYLINDER		-------	-------	1	45540-MB4-671	1666882
10	HOLDER MASTER CYLINDER		-------	-------	1	45517-MB0-006	1235738
11	PLATE DIAPHRAGM		-------	-------	1	45518-MB4-671	1666890
12	DIAPHRAGM		-------	-------	1	45520-MA5-672	1547256
13	BOOT MASTER CYLINDER		-------	-------	1	45522-422-000	0692822
14	CYLINDER SET MASTER		-------	-------	1	45530-MA5-671	0952366
15	LEVER COMP R HANDLEBAR		-------	-------	1	53175-KE8-006	1435320
	LEVER COMP R HANDLEBAR		-------	-------	1	53175-MJ6-006	1776590
16	BOLT R HANDLEBAR LEVER PIVOT		-------	-------	1	90114-MA5-671	0952416
17	BOLT SOCKET 6X23		-------	-------	2	90117-MB0-000	1237072

SC150* FRAME NO EM000017 TO EM003753
SC151* FRAME NO EM000003 TO EM000627

VF1000F 84

BLOCK NO. F-4

REF NO	DESCRIPTION	AREA CODE	SERIAL NUMBER FROM	SERIAL NUMBER TO	QTY REQ	PART NUMBER	HONDA CODE
18	BOLT, OIL, 10X34		-------	-------	1	90145-MB0-010	1792530
19	BOLT, OIL, 10X22		-------	-------	4	90145-KM3-750	2072775
	BOLT, OIL, 10X22		-------	-------	4	90145-961-010	1792548
20	WASHER, OIL BOLT		-------	-------	11	90545-300-000	0189902
21	CIRCLIP		-------	-------	1	90651-MA5-671	1251404
22	SCREW, FLAT, 4X12		-------	-------	2	93600-04012-1G	1237346
23	SCREW-WASHER, 4X12		-------	-------	1	93893-04012-17	1237353
24	NUT, FLANGE, 6MM		-------	-------	1	94050-06000	0471623
25	BOLT, FLANGE, 6X25		-------	-------	2	95700-06025-07	0721076
	BOLT, FLANGE, 6X25		-------	-------	2	95701-06025-07	2449122

CONTENTS

TITLE	GRID
AIR CLEANER	1-E7
ALTERNATOR	1-B8
BATTERY	1-E5
BRAKE CALIPER, FR	1-D10
BRAKE CALIPER, RR	1-E1
BRAKE MASTER CYL, FR	1-D4
BRAKE MASTER CYL, RR	1-D12
CAM CHAIN	1-B5
CAMSHAFT	1-B4
CANISTER (AC)	1-F11
CARBURETOR (ASSY.)	1-C7
CARBURETOR COMPONENTS	1-C8
CHAIN CASE	1-E11
CLUTCH	1-D3
CLUTCH	1-B6
CLUTCH MASTER CYLINDER	1-D5
CONTROL SWITCHES	1-D3
COWL	1-F8
COWL, RR	1-E4
CRANKCASE COVER, L	1-B9
CRANKCASE COVER, R	1-B6
CRANKSHAFT	1-C2
CYLINDER BLOCK	1-B12
CYLINDER HEAD COVER	1-B1
CYLINDER HEAD, FR	1-B1
CYLINDER HEAD, RR	1-B3
FENDER, FR	1-D7
FENDER, RR	1-F1
FRAME BODY	1-F6
FUEL PUMP	1-E6
FUEL TANK	1-E3
GASKET KIT A	1-C9
GASKET KIT B	1-C9
GEARSHIFT DRUM	1-C5
HANDLEBAR	1-D6
HEADLIGHT	1-D1
IGNITION COIL	1-F4
INSTRUMENTS	1-D2
MARK	1-F10
MUFFLER, EXHAUST	1-E8
OIL FILTER	1-B11
OIL PAN	1-B11
OIL PUMP	1-B11
PEDAL, BRAKE	1-E9
PEDAL, GEARSHIFT	1-E9
PISTON	1-C2
PULSE GENERATOR	1-B7
RADIATOR	1-F5
SEAT	1-E4
SHOCK ABSORBER, FR	1-D8
SHOCK ABSORBER, RR	1-E12
SIDE COVER	1-E5
SPARK UNIT	1-F1
STAND	1-E10
STARTER CLUTCH	1-B7
STARTER MOTOR	1-B11
STEERING STEM	1-D7
STEP	1-E9
STRIPE	1-F10
SWINGARM	1-E11
TAILLIGHT	1-F3
TENSIONER	1-B5
THERMOSTAT	1-C6
TOOLS	1-F8
TOP BRIDGE	1-D6
TRANSMISSION	1-C4
TURN SIGNAL	1-F2
VALVE	1-B4
WATER PIPE	1-C6
WATER PUMP	1-B9
WHEEL, FR	1-D11
WHEEL, RR	1-E2
WIRE HARNESS	1-F4

GRID NO.

CLUTCH MASTER CYLINDER

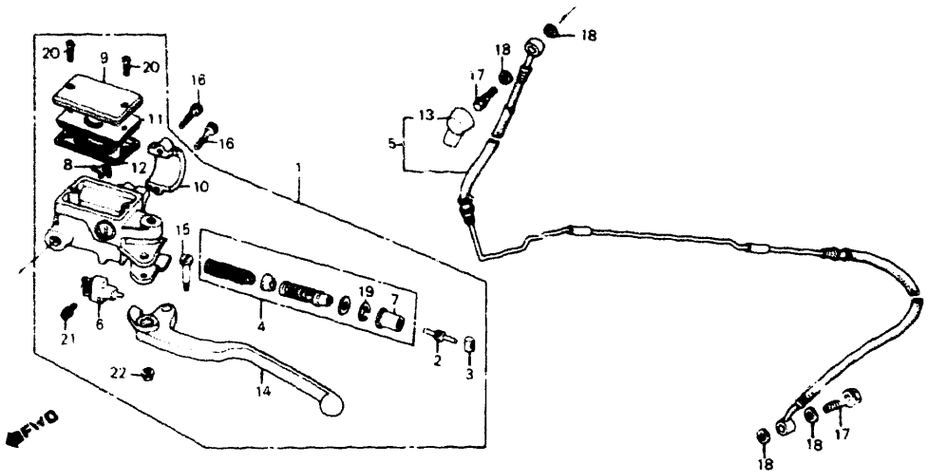

VF1000F 84

G43-BM26-23

BLOCK NO. F-5

REF NO	DESCRIPTION	AREA CODE	SERIAL NUMBER FROM	SERIAL NUMBER TO	QTY REQ	PART NUMBER	HONDA CODE
1	CYLINDER ASSY., CLUTCH MASTER		-------	-------	1	22880-MB2-673	1596147
2	ROD, PUSH		-------	-------	1	22884-MB0-006	1245729
3	BUSHING		-------	-------	1	22885-MB0-006	1245737
4	PISTON SET, CLUTCH MASTER CYLINDER		-------	-------	1	22886-MB0-305	1245745
5	PIPE ASSY., CLUTCH		-------	-------	1	22900-MB6-000	1749076
6	SWITCH ASSY., CLUTCH		-------	-------	1	35330-MB0-003	1246859
7	BOOT COMP		-------	-------	1	45504-410-003	1211820
8	PROTECTOR		-------	-------	1	45512-MA6-006	1235688
9	CAP, MASTER CYLINDER		-------	-------	1	45540-MB4-671	1666882
10	HOLDER, MASTER CYLINDER		-------	-------	1	45517-MB0-006	1235738
11	PLATE, DIAPHRAGM		-------	-------	1	45518-MB4-671	1666890
12	DIAPHRAGM		-------	-------	1	45520-MA5-671	0952358
	DIAPHRAGM		-------	-------	1	45520-MA5-672	1547256
13	BOOT, MASTER CYLINDER		-------	-------	1	45522-422-000	0692822
14	LEVER COMP., L. HANDLEBAR		-------	-------	1	53178-KE8-006	1373992
15	BOLT, R. HANDLEBAR LEVER PIVOT		-------	-------	1	90114-MA5-671	0952416
16	BOLT, SOCKET, 6X23		-------	-------	2	90117-MB0-000	1237072
17	BOLT, OIL, 10X22		-------	-------	2	90145-KM3-750	2072775

SC150* FRAME NO. EM000017 TO EM003753
SC151* FRAME NO. EM000003 TO EM000627

VF1000F 84

BLOCK NO. F-5

REF NO	DESCRIPTION	AREA CODE	SERIAL NUMBER FROM	SERIAL NUMBER TO	QTY REQ	PART NUMBER	HONDA CODE
17	BOLT, OIL, 10X22		-------	-------	2	90145-961-010	1792548
18	WASHER, OIL BOLT		-------	-------	4	90545-300-000	0189902
19	CIRCLIP, INTERNAL, 18MM (NISSHIN)		-------	-------	1	90651-377-003	0400572
20	SCREW, FLAT, 4X12		-------	-------	2	93600-04012-1G	1237346
21	SCREW-WASHER, 4X12		-------	-------	1	93893-04012-17	1237353
22	NUT, FLANGE, 6MM		-------	-------	1	94050-06000	0471623

CONTENTS

TITLE	GRID
AIR CLEANER	1-E7
ALTERNATOR	1-B8
BATTERY	1-E5
BRAKE CALIPER, FR	1-D10
BRAKE CALIPER, RR	1-E1
BRAKE MASTER CYL. FR	1-D4
BRAKE MASTER CYL. RR	1-D12
CAM CHAIN	1-B5
CAMSHAFT	1-B4
CANISTER (AC)	1-F11
CARBURETOR (ASSY.)	1-C7
CARBURETOR COMPONENTS	1-C8
CHAIN CASE	1-E11
CLUTCH	1-D3
CLUTCH	1-B6
CLUTCH MASTER CYLINDER	1-D5
CONTROL SWITCHES	1-D3
COWL	1-F8
COWL, RR	1-E4
CRANKCASE COVER, L	1-B9
CRANKCASE COVER, R	1-B6
CRANKSHAFT	1-C2
CYLINDER BLOCK	1-B12
CYLINDER HEAD COVER	1-B1
CYLINDER HEAD, FR	1-B1
CYLINDER HEAD, RR	1-B3
FENDER, FR	1-D7
FENDER, RR	1-F1
FRAME BODY	1-F6
FUEL PUMP	1-E6
FUEL TANK	1-E3
GASKET KIT A	1-C9
GASKET KIT B	1-C9
GEARSHIFT DRUM	1-C5
HANDLEBAR	1-D6
HEADLIGHT	1-D1
IGNITION COIL	1-F4
INSTRUMENTS	1-D2
MARK	1-F10
MUFFLER, EXHAUST	1-E8
OIL FILTER	1-B11
OIL PAN	1-B11
OIL PUMP	1-B11
PEDAL, BRAKE	1-E9
PEDAL, GEARSHIFT	1-E9
PISTON	1-C2
PULSE GENERATOR	1-B7
RADIATOR	1-F5
SEAT	1-E4
SHOCK ABSORBER, FR	1-D8
SHOCK ABSORBER, RR	1-E12
SIDE COVER	1-E5
SPARK UNIT	1-F1
STAND	1-E10
STARTER CLUTCH	1-B7
STARTER MOTOR	1-B11
STEERING STEM	1-D7
STEP	1-E9
STRIPE	1-F10
SWINGARM	1-E11
TAILLIGHT	1-F3
TENSIONER	1-B5
THERMOSTAT	1-C6
TOOLS	1-F8
TOP BRIDGE	1-D6
TRANSMISSION	1-C4
TURN SIGNAL	1-F2
VALVE	1-B4
WATER PIPE	1-C6
WATER PUMP	1-B9
WHEEL, FR	1-D11
WHEEL, RR	1-E2
WIRE HARNESS	1-F4

GRID NO.

HANDLEBAR • TOP BRIDGE

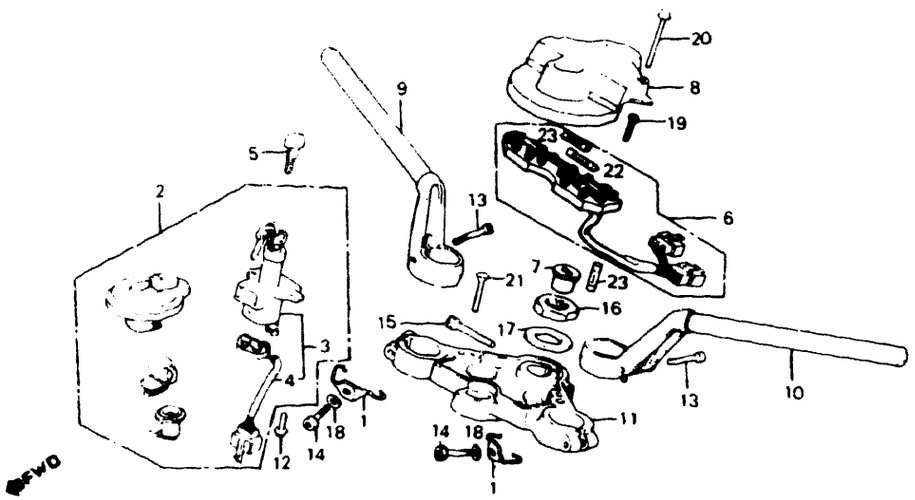

Type	Key No.
TYPE 1	A** , B**
TYPE 2	C** , D**

G43-BMB6-52TABLE

SC150* FRAME NO EM000017 TO EM003753
SC151* FRAME NO EM000003 TO EM000627

VF1000F'84

BLOCK NO. F-6

REF NO	DESCRIPTION	AREA CODE	SERIAL NUMBER FROM	SERIAL NUMBER TO	QTY REQ	PART NUMBER	HONDA CODE
1	GUIDE, CABLE		-------	-------	2	17908-MB6-000	1759950
2	KEY SET	A	-------	-------	1	35010-MB6-000	1749530
	KEY SET	A	-------	-------	1	35010-MB6-010	2729796
	KEY SET	AC	-------	-------	1	35010-MB6-740	1781830
	KEY SET	AC	-------	-------	1	35010-MB6-741	2151223
3	SWITCH ASSY., COMBINATION & LOCK		-------	-------	1	35100-MB6-007	1749548
	SWITCH ASSY., COMBINATION & LOCK		-------	-------	1	35100-MB6-017	2097764
4	BASE COMP., CONTACT		-------	-------	1	35101-MB6-007	1749555
5	KEY, BLANK (TYPE 1)		-------	-------	(1)	35121-KW3-771	3029840
	KEY, BLANK (TYPE 1)		-------	-------	(1)	35121-MA6-811	1246750
	KEY, BLANK (TYPE 2)		-------	-------	(1)	35122-KW3-771	3029857
	KEY, BLANK (TYPE 2)		-------	-------	(1)	35122-MA6-811	1246768
6	PLATE ASSY., FUSE		-------	-------	1	38200-MB6-005	1749654
7	CASE, FUSE		-------	-------	1	38205-MB6-003	1754134
8	COVER, FUSE PLATE		-------	-------	1	38210-MB2-000	1429299
9	PIPE, R. HANDLEBAR		-------	-------	1	53100-MB6-000	1749985
10	PIPE, L. HANDLEBAR		-------	-------	1	53150-MB6-000	1750009
11	BRIDGE, FORK TOP		-------	-------	1	53230-MB6-000	1750025
12	BOLT, FLANGE, 8X19		-------	-------	2	90104-MJ1-000	1735307
	BOLT, FLANGE, 8X19		-------	-------	2	90105-MA6-000	1250893
13	BOLT, SOCKET, 8X34		-------	-------	2	90112-MB0-000	1250976
14	BOLT, SOCKET, 7X48		-------	-------	2	90151-MB2-000	1431253
15	BOLT, SOCKET, 8X55		-------	-------	1	90166-MB2-000	1431261
16	NUT, STEERING STEM		-------	-------	1	90304-425-000	0719401
17	WASHER, STEERING STEM		-------	-------	1	90503-425-000	0719443
18	WASHER, PLAIN, 7MM		-------	-------	2	90511-MB2-000	1476936
19	SCREW, PAN, 5X16		-------	-------	2	93500-05016-0G	0256933
20	SCREW, PAN, 5X35		-------	-------	2	93500-05035-0G	0700823
21	SCREW, FLAT, 6X32		-------	-------	2	93600-06035-0G	1762251
22	FUSE A (10A)		-------	-------	6	98200-11000	0294439
23	FUSE A (15A)		-------	-------	4	98200-11500	0216283

CONTENTS

TITLE	GRID
AIR CLEANER	1-E7
ALTERNATOR	1-B8
BATTERY	1-E5
BRAKE CALIPER, FR	1-D10
BRAKE CALIPER, RR	1-E1
BRAKE MASTER CYL. FR	1-D4
BRAKE MASTER CYL. RR	1-D12
CAM CHAIN	1-B5
CAMSHAFT	1-B4
CANISTER (AC)	1-F11
CARBURETOR (ASSY.)	1-C7
CARBURETOR COMPONENTS	1-C8
CHAIN CASE	1-E11
CLUTCH	1-D3
CLUTCH	1-B6
CLUTCH MASTER CYLINDER	1-D5
CONTROL SWITCHES	1-D3
COWL	1-F8
COWL, RR	1-E4
CRANKCASE COVER, L	1-B9
CRANKCASE COVER, R	1-B6
CRANKSHAFT	1-C2
CYLINDER BLOCK	1-B12
CYLINDER HEAD COVER	1-B1
CYLINDER HEAD, FR	1-B1
CYLINDER HEAD, RR	1-B3
FENDER, FR	1-D7
FENDER, RR	1-F1
FRAME BODY	1-F6
FUEL PUMP	1-E6
FUEL TANK	1-E3
GASKET KIT A	1-C9
GASKET KIT B	1-C9
GEARSHIFT DRUM	1-C5
HANDLEBAR	1-D6
HEADLIGHT	1-D1
IGNITION COIL	1-F4
INSTRUMENTS	1-D2
MARK	1-F10
MUFFLER, EXHAUST	1-E8
OIL FILTER	1-B11
OIL PAN	1-B11
OIL PUMP	1-B11
PEDAL, BRAKE	1-E9
PEDAL, GEARSHIFT	1-E9
PISTON	1-C2
PULSE GENERATOR	1-B7
RADIATOR	1-F5
SEAT	1-E4
SHOCK ABSORBER, FR	1-D8
SHOCK ABSORBER, RR	1-E12
SIDE COVER	1-E5
SPARK UNIT	1-F1
STAND	1-E10
STARTER CLUTCH	1-B7
STARTER MOTOR	1-B11
STEERING STEM	1-D7
STEP	1-E9
STRIPE	1-F10
SWINGARM	1-E11
TAILLIGHT	1-F3
TENSIONER	1-B5
THERMOSTAT	1-C6
TOOLS	1-F8
TOP BRIDGE	1-D6
TRANSMISSION	1-C4
TURN SIGNAL	1-F2
VALVE	1-B4
WATER PIPE	1-C6
WATER PUMP	1-B9
WHEEL, FR	1-D11
WHEEL, RR	1-E2
WIRE HARNESS	1-F4

GRID NO.

1-D 6

STEERING STEM

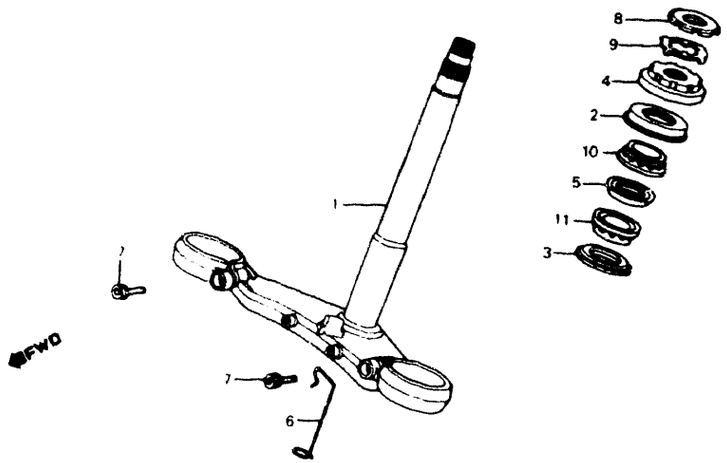

VF1000F 84

G43-BMB6-25

BLOCK NO. F-7

REF NO	DESCRIPTION	AREA CODE	SERIAL NUMBER FROM	SERIAL NUMBER TO	QTY REQ	PART NUMBER	HONDA CODE
1	STEM COMP., STEERING		-------	-------	1	53200-MB6-000	1750017
2	DUST SEAL, STEERING HEAD		-------	-------	1	53213-MB4-771	1546951
3	DUST SEAL, STEERING HEAD		-------	-------	1	53214-371-010	0470948
4	THREAD COMP., STEERING HEAD TOP		-------	-------	1	53220-MB2-000	1430594
5	HOLDER, GREASE		-------	-------	1	53223-371-010	0470955
6	CLIP, SPEEDOMETER CABLE		-------	-------	1	64203-MB6-000	1760875
7	BOLT, SOCKET, 10X30		-------	-------	2	90152-MB0-000	1251107
8	THREAD B, STEERING HEAD UPPER		-------	-------	1	90302-425-830	0823930
9	WASHER, LOCK		-------	-------	1	90506-425-830	0823948
10	BEARING, HEAD PIPE UPPER		-------	-------	1	91015-MB4-771	1547132
11	BEARING, HEAD PIPE LOWER		-------	-------	1	91016-MB4-771	1547140

SC150* FRAME NO EM000017 TO EM003753
SC151* FRAME NO EM000003 TO EM000627

FRONT FENDER

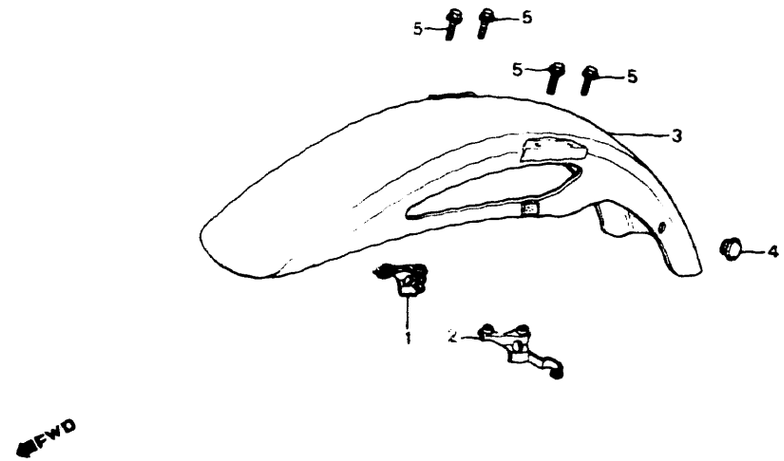

VF1000F 84

G43-BMB6-53

BLOCK NO. F-8

REF NO	DESCRIPTION	AREA CODE	SERIAL NUMBER FROM	SERIAL NUMBER TO	QTY REQ	PART NUMBER	HONDA CODE
1	CLAMP, R. FR. BRAKE HOSE		-------	-------	1	60108-MJ1-000	1691591
2	CLAMP, L. FR. BRAKE HOSE		-------	-------	1	60109-MJ1-000	1691609
3	FENDER COMP., FR. "NH138" (SHASTA WHITE)		-------	-------	1	61100-MB2-000ZE	1754696
4	GROMMET, SWITCH HOLE, 10MM		-------	-------	1	66892-567-680	0456731
5	BOLT, FLANGE, 6X14		-------	-------	4	96000-06014-02	1545250

CONTENTS

TITLE	GRID
AIR CLEANER	1-E7
ALTERNATOR	1-B8
BATTERY	1-E5
BRAKE CALIPER, FR	1-D10
BRAKE CALIPER, RR	1-E1
BRAKE MASTER CYL., FR	1-D4
BRAKE MASTER CYL., RR	1-D12
CAM CHAIN	1-B5
CAMSHAFT	1-B4
CANISTER (AC)	1-F11
CARBURETOR (ASSY.)	1-C7
CARBURETOR COMPONENTS	1-C8
CHAIN CASE	1-E11
CLUTCH	1-D3
CLUTCH	1-B6
CLUTCH MASTER CYLINDER	1-D5
CONTROL SWITCHES	1-D3
COWL	1-F8
COWL, RR	1-E4
CRANKCASE COVER, L	1-B9
CRANKCASE COVER, R	1-B6
CRANKSHAFT	1-C2
CYLINDER BLOCK	1-B12
CYLINDER HEAD COVER	1-B1
CYLINDER HEAD, FR.	1-B1
CYLINDER HEAD, RR	1-B3
FENDER, FR.	1-D7
FENDER, RR	1-F1
FRAME BODY	1-F6
FUEL PUMP	1-E6
FUEL TANK	1-E3
GASKET KIT A	1-C9
GASKET KIT B	1-C9
GEARSHIFT DRUM	1-C5
HANDLEBAR	1-D5
HEADLIGHT	1-D1
IGNITION COIL	1-F4
INSTRUMENTS	1-D2
MARK	1-F10
MUFFLER, EXHAUST	1-E8
OIL FILTER	1-B11
OIL PAN	1-B11
OIL PUMP	1-B11
PEDAL, BRAKE	1-E9
PEDAL, GEARSHIFT	1-E9
PISTON	1-C2
PULSE GENERATOR	1-B7
RADIATOR	1-F5
SEAT	1-E4
SHOCK ABSORBER, FR	1-D8
SHOCK ABSORBER, RR	1-E12
SIDE COVER	1-E5
SPARK UNIT	1-F1
STAND	1-E10
STARTER CLUTCH	1-B7
STARTER MOTOR	1-B11
STEERING STEM	1-D7
STEP	1-E9
STRIPE	1-F10
SWINGARM	1-E11
TAILLIGHT	1-F3
TENSIONER	1-B5
THERMOSTAT	1-C6
TOOLS	1-F8
TOP BRIDGE	1-D6
TRANSMISSION	1-C4
TURN SIGNAL	1-F2
VALVE	1-B4
WATER PIPE	1-C6
WATER PUMP	1-B9
WHEEL, FR	1-D11
WHEEL, RR	1-E2
WIRE HARNESS	1-F4

GRID NO.

FRONT SHOCK ABSORBER

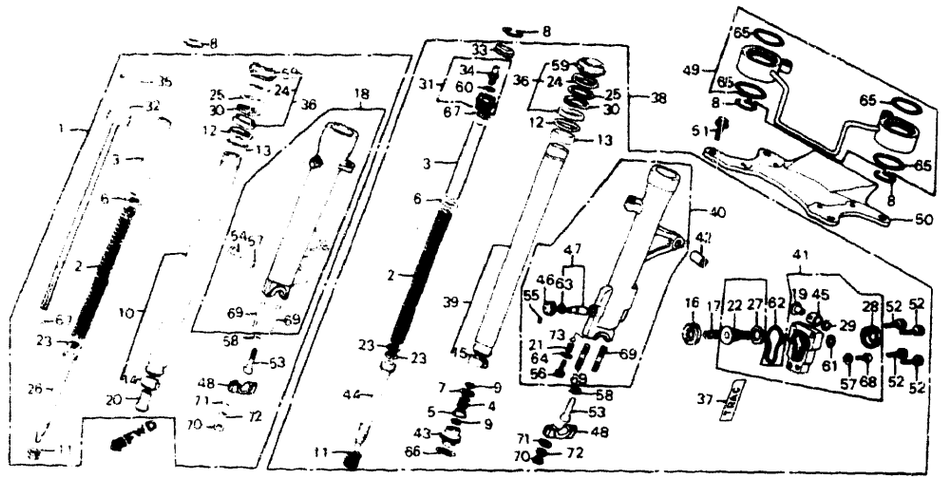

VF1000F 84

G43-BMB6-27

BLOCK NO. F-9

REF NO	DESCRIPTION	AREA CODE	SERIAL NUMBER FROM	SERIAL NUMBER TO	QTY REQ	PART NUMBER	HONDA CODE
1	SHOCK ABSORBER ASSY., R. FR		-------	-------	1	51400-MB6-611	1749928
	SHOCK ABSORBER ASSY., R. FR		-------	-------	1	51400-MB6-612	2065530
2	SPRING, FR. SHOCK		-------	-------	2	51401-MB6-611	1754506
3	COLLAR, SPRING		-------	-------	2	51402-MB6-611	1744010
4	SPRING, OIL LOCK		-------	-------	1	51402-MB7-611	1289222
5	VALVE, OIL LOCK		-------	-------	1	51403-MB7-611	1289248
6	PLATE, SPRING JOINT		-------	-------	2	51404-MB4-003	1390590
7	SEAT, SPRING		-------	-------	1	51404-MB7-611	1289255
8	RING, STOPPER		-------	-------	4	51405-MB4-003	1390608
9	RING, STOPPER		-------	-------	2	51405-MB7-611	1289263
10	PIPE COMP., R. FR. SHOCK		-------	-------	1	51410-MB6-611	1754514
11	SPRING, REBOUND		-------	-------	2	51411-MG9-671	1527811
12	RING, BACK UP		-------	-------	2	51412-MB4-003	1390624
	RING, BACK UP		-------	-------	2	51412-MB4-305	1425800
13	BUSH, GUIDE		-------	-------	2	51414-MB4-003	1390640
14	BUSH, SLIDER (A)		-------	-------	1	51415-MB4-003	1390632
15	BUSH B, SLIDER (B TYPE)		-------	-------	1	51419-MB4-003	1434968
16	PACKING		-------	-------	1	51417-MJ0-003	1744044
	PACKING		-------	-------	1	51417-MJ0-013	2021970
17	SPRING, PISTON		-------	-------	1	51418-MJ0-003	1744051

1-D 8

SC150* FRAME NO. EM000017 TO EM003753
SC151* FRAME NO. EM000003 TO EM000627

VF1000F 84

BLOCK NO. F-9

REF NO	DESCRIPTION	AREA CODE	SERIAL NUMBER FROM	SERIAL NUMBER TO	QTY REQ	PART NUMBER	HONDA CODE
18	CASE COMP., R. LOWER		-------	-------	1	51421-MB6-611	1754522
19	COLLAR, PISTON		-------	-------	1	51423-MJ0-003	1744077
20	PIECE, OIL LOCK		-------	-------	1	51432-MB6-611	1744093
21	SPRING, CLICK		-------	-------	1	51434-MC7-003	1212257
22	PISTON		-------	-------	1	51436-MJ0-003	1744101
23	RING, PISTON		-------	-------	3	51437-MB4-003	1390665
24	HOLDER, GREASE		-------	-------	2	51438-MB4-003	1390673
25	WASHER, HOLDER		-------	-------	2	51439-MB4-003	1390681
26	PIPE COMP., SEAT		-------	-------	1	51440-MB6-611	1754530
27	RUBBER, STOPPER		-------	-------	1	51441-MJ0-003	1744127
28	BOOT, PISTON CASE		-------	-------	1	51442-MJ0-003	1744135
29	RING, STOPPER		-------	-------	1	51445-MJ0-003	1744143
30	CIRCLIP, INTERNAL		-------	-------	2	51447-MB4-003	1390715
31	BOLT ASSY., FR. SHOCK		-------	-------	1	51450-MB6-611	1744150
32	BOLT ASSY., FR. SHOCK		-------	-------	1	51454-MB6-611	1754548
33	CAP, AIR VALVE		-------	-------	1	51456-MB2-003	1435395
34	VALVE COMP., AIR (SHOWA)		-------	-------	1	51456-469-013	0950428
35	CAP, ADJUSTING PLATE		-------	-------	1	51458-MG5-611	1708379
36	SEAL SET, FR. SHOCK		-------	-------	2	51490-MB4-305	1390731
	SEAL SET, FR. SHOCK		-------	-------	2	51490-MB4-315	1833706
37	LABEL, FR. SHOCK		-------	-------	1	51496-MC7-670	1249390
38	SHOCK ABSORBER ASSY., L. FR.		-------	-------	1	51500-MB6-611	1749936
	SHOCK ABSORBER ASSY., L. FR.		-------	-------	1	51500-MB6-612	1963024
	SHOCK ABSORBER ASSY., L. FR.		-------	-------	1	51500-MB6-613	2298990
39	PIPE COMP., L. FR. SHOCK		-------	-------	1	51510-MB6-611	1754563
40	CASE ASSY., L. LOWER		-------	-------	1	51521-MB6-611	1754571
41	CASE COMP., PISTON		-------	-------	1	51530-MJ0-003	1762095
42	BUSH, PIVOT		-------	-------	1	51532-MB2-300	1430420
43	PIECE B, OIL LOCK		-------	-------	1	51532-MB4-003	1390756
44	PIPE, SEAT		-------	-------	1	51540-MB6-611	1754589
45	BUSH, RUBBER		-------	-------	1	51545-MJ0-003	1744259
46	PLATE COMP., ADJUSTER		-------	-------	1	51558-MJ0-003	1744267
47	ROD SET, ADJUSTER		-------	-------	1	51591-MJ0-305	1744275
48	HOLDER, AXLE		-------	-------	2	51634-MJ0-003	1762103
49	EQUALIZER COMP., FR. SHOCK		-------	-------	1	53137-MB6-003	1749993
50	STABILIZER, FR. SHOCK		-------	-------	1	61102-MB6-000	1754712
51	BOLT, FLANGE, 8X16		-------	-------	4	90106-MB2-000	1431188
52	BOLT, SOCKET, 6MM		-------	-------	4	90116-MJ0-003	1762160
53	BOLT, SOCKET, 8MM		-------	-------	2	90116-283-010	0254169
54	BOLT, HEX., 6X17		-------	-------	1	90125-MB2-003	1500081
55	SCREW, SOCKET		-------	-------	1	90150-MJ0-003	1745272
56	BOLT, SOCKET		-------	-------	1	90151-MJ0-003	1762186

CONTENTS

TITLE	GRID
AIR CLEANER	1-E7
ALTERNATOR	1-B8
BATTERY	1-E5
BRAKE CALIPER, FR	1-D10
BRAKE CALIPER, RR	1-E1
BRAKE MASTER CYL. FR	1-D4
BRAKE MASTER CYL. RR	1-D12
CAM CHAIN	1-B5
CAMSHAFT	1-B4
CANISTER (AC)	1-F11
CARBURETOR (ASSY.)	1-C7
CARBURETOR COMPONENTS	1-C8
CHAIN CASE	1-E11
CLUTCH	1-D3
CLUTCH	1-B6
CLUTCH MASTER CYLINDER	1-D5
CONTROL SWITCHES	1-D3
COWL	1-F8
COWL, RR	1-E4
CRANKCASE COVER, L	1-B9
CRANKCASE COVER, R	1-B6
CRANKSHAFT	1-C2
CYLINDER BLOCK	1-B12
CYLINDER HEAD COVER	1-B1
CYLINDER HEAD, FR	1-B1
CYLINDER HEAD, RR	1-B3
FENDER, FR	1-D7
FENDER, RR	1-F1
FRAME BODY	1-F6
FUEL PUMP	1-E6
FUEL TANK	1-E3
GASKET KIT A	1-C9
GASKET KIT B	1-C9
GEARSHIFT DRUM	1-C5
HANDLEBAR	1-D6
HEADLIGHT	1-D1
IGNITION COIL	1-F4
INSTRUMENTS	1-D2
MARK	1-F10
MUFFLER, EXHAUST	1-E8
OIL FILTER	1-B11
OIL PAN	1-B11
OIL PUMP	1-B11
PEDAL, BRAKE	1-E9
PEDAL, GEARSHIFT	1-E9
PISTON	1-C2
PULSE GENERATOR	1-B7
RADIATOR	1-F5
SEAT	1-E4
SHOCK ABSORBER, FR	1-D8
SHOCK ABSORBER, RR	1-E12
SIDE COVER	1-E5
SPARK UNIT	1-F1
STAND	1-E10
STARTER CLUTCH	1-B7
STARTER MOTOR	1-B11
STEERING STEM	1-D7
STEP	1-E9
STRIPE	1-F10
SWINGARM	1-E11
TAILLIGHT	1-F3
TENSIONER	1-B5
THERMOSTAT	1-C6
TOOLS	1-F8
TOP BRIDGE	1-D6
TRANSMISSION	1-C4
TURN SIGNAL	1-F2
VALVE	1-B4
WATER PIPE	1-C6
WATER PUMP	1-B9
WHEEL, FR	1-D11
WHEEL, RR	1-E2
WIRE HARNESS	1-F4

GRID NO.

FRONT SHOCK ABSORBER

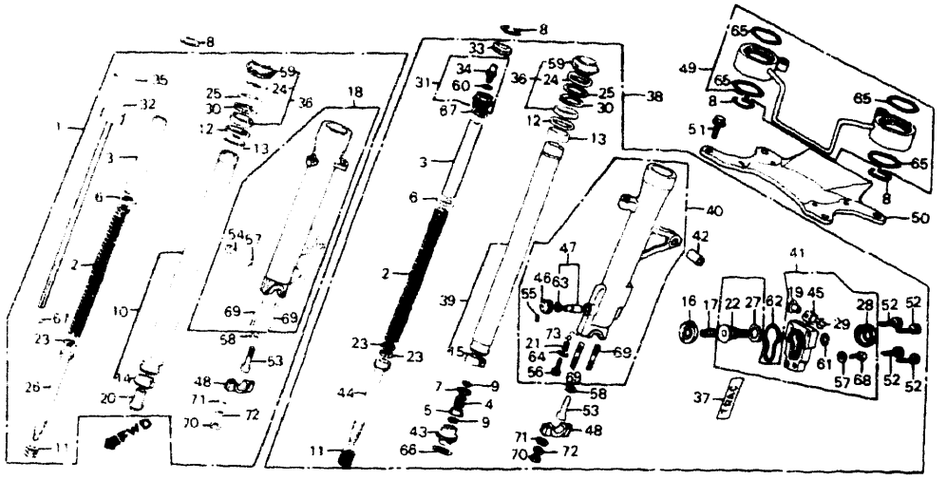

VF1000F 84

G43 BMB6-27

BLOCK NO F-9

REF NO	DESCRIPTION	AREA CODE	SERIAL NUMBER FROM	SERIAL NUMBER TO	QTY REQ	PART NUMBER	HONDA CODE
57	GASKET, FR SHOCK DRAIN VALVE		-------	-------	2	90543-273-000	0052209
58	WASHER, SPECIAL, 8MM		-------	-------	2	90544-283-000	0259457
59	DUST SEAL		-------	-------	2	91254-MB4-003	1390772
60	O-RING, 5.8X1.9		-------	-------	1	91301-469-003	0874768
	O-RING, 5.8X1.9		-------	-------	1	91305-323-000	0258012
	O-RING, 5.8X1.9		-------	-------	1	91318-ME5-003	1366574
61	O-RING, 16MM		-------	-------	1	91304-MJ0-003	1762210
62	O-RING		-------	-------	1	91308-MJ0-003	1762228
63	O-RING		-------	-------	1	91310-MJ0-003	1745439
64	O-RING		-------	-------	1	91311-MJ0-003	1762236
65	O-RING		-------	-------	4	91352-MB4-003	1390780
66	O-RING, 37.5X2 (SHOWA)		-------	-------	1	91353-MB4-003	1762244
67	O-RING		-------	-------	2	91356-MB4-003	1391614
68	BOLT, HEX, 6X8		-------	-------	1	92000-06008-0A	0724377
	BOLT, HEX, 6X8		-------	-------	1	92101-06008-0A	2504868
69	BOLT, STUD, 8X50		-------	-------	4	92700-08050-3B	0416966
	BOLT, STUD, 8X50		-------	-------	4	92900-08028-3B	2892685
70	NUT, HEX, 8MM		-------	-------	4	94030-08070	1762277
71	WASHER, PLAIN, 8MM		-------	-------	4	94101-08700	0313262
72	WASHER, SPRING, 8MM		-------	-------	4	94111-08700	0313270

SC150* FRAME NO. EM000017 TO EM003753
SC151* FRAME NO. EM000003 TO EM000627

VF1000F 84

BLOCK NO F-9

REF NO	DESCRIPTION	AREA CODE	SERIAL NUMBER FROM	SERIAL NUMBER TO	QTY REQ	PART NUMBER	HONDA CODE
73	BALL, STEEL, #5 (5/32)		-------	-------	1	96211-05000	0058917

CONTENTS

TITLE	GRID
AIR CLEANER	1-E7
ALTERNATOR	1-B8
BATTERY	1-E5
BRAKE CALIPER, FR	1-D10
BRAKE CALIPER, RR	1-E1
BRAKE MASTER CYL. FR	1-D4
BRAKE MASTER CYL. RR	1-D12
CAM CHAIN	1-B5
CAMSHAFT	1-B4
CANISTER (AC)	1-F11
CARBURETOR (ASSY.)	1-C7
CARBURETOR COMPONENTS	1-C8
CHAIN CASE	1-E11
CLUTCH	1-D3
CLUTCH	1-B6
CLUTCH MASTER CYLINDER	1-D5
CONTROL SWITCHES	1-D3
COWL	1-F8
COWL, RR	1-E4
CRANKCASE COVER, L	1-B9
CRANKCASE COVER, R	1-B6
CRANKSHAFT	1-C2
CYLINDER BLOCK	1-B12
CYLINDER HEAD COVER	1-B1
CYLINDER HEAD, FR	1-B1
CYLINDER HEAD, RR	1-B3
FENDER, FR	1-D7
FENDER, RR	1-F1
FRAME BODY	1-F6
FUEL PUMP	1-E6
FUEL TANK	1-E3
GASKET KIT A	1-C9
GASKET KIT B	1-C9
GEARSHIFT DRUM	1-C5
HANDLEBAR	1-D6
HEADLIGHT	1-D1
IGNITION COIL	1-F4
INSTRUMENTS	1-D2
MARK	1-F10
MUFFLER, EXHAUST	1-E8
OIL FILTER	1-B11
OIL PAN	1-B11
OIL PUMP	1-B11
PEDAL, BRAKE	1-E9
PEDAL, GEARSHIFT	1-E9
PISTON	1-C2
PULSE GENERATOR	1-B7
RADIATOR	1-F5
SEAT	1-E4
SHOCK ABSORBER, FR	1-D8
SHOCK ABSORBER, RR	1-E12
SIDE COVER	1-E5
SPARK UNIT	1-F1
STAND	1-E10
STARTER CLUTCH	1-B7
STARTER MOTOR	1-B11
STEERING STEM	1-D7
STEP	1-E9
STRIPE	1-F10
SWINGARM	1-E11
TAILLIGHT	1-F3
TENSIONER	1-B5
THERMOSTAT	1-C6
TOOLS	1-F8
TOP BRIDGE	1-D6
TRANSMISSION	1-C4
TURN SIGNAL	1-F2
VALVE	1-B4
WATER PIPE	1-C6
WATER PUMP	1-B9
WHEEL, FR	1-D11
WHEEL, RR	1-E2
WIRE HARNESS	1-F4

GRID NO.

FRONT BRAKE CALIPER

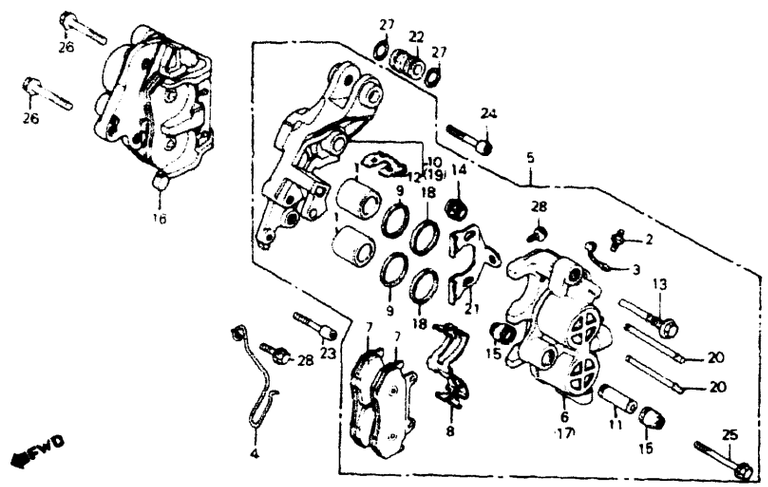

VF1000F 84

G43-BMB6-28

BLOCK NO. F-10

REF NO	DESCRIPTION	AREA CODE	SERIAL NUMBER FROM	SERIAL NUMBER TO	QTY REQ	PART NUMBER	HONDA CODE
1	PISTON		-------	-------	4	43107-MA7-006	1302223
2	SCREW, BLEEDER		-------	-------	2	43352-568-003	0505735
3	CAP, BLEEDER		-------	-------	2	43353-461-771	0954230
4	CLAMP, SPEEDOMETER CABLE		-------	-------	1	44832-ME2-000	1272426
5	CALIPER ASSY., L. FR (NISSHIN TT)		-------	-------	1	45100-MJ0-017	1881176
6	CALIPER COMP., L. FR		-------	-------	1	45101-MJ0-006	1762012
7	PAD COMP., FR. (ASK) (KIT P/N 451A0-MJ1-670)		-------	-------	4	45105-MB1-701	1458926
	PAD COMP., FR. (TT) (KIT P/N 451A0-MJ1-670)		-------	-------	4	45105-MB1-702	1458934
	PAD COMP., FR. (ASK) (KIT P/N 451A0-MJ1-670)		-------	-------	4	45105-MJ1-672	1734797
	PAD COMP., FR. (ASK) (KIT P/N 451A0-MJ1-670)		-------	-------	4	45105-MJ1-673	2781037
8	SPRING, PAD		-------	-------	2	45108-MA3-006	1011956
9	DUST SEAL		-------	-------	4	45109-MA7-006	1302272
10	BRACKET COMP., L. FR		-------	-------	1	45110-MJ0-016	1881226
11	SLEEVE		-------	-------	2	45111-MA3-006	1011980
12	RETAINER, BRACKET		-------	-------	2	45112-445-631	1095496

SC150* FRAME NO. EM000017 TO EM003753
SC151* FRAME NO. EM000003 TO EM000627

VF1000F 84

BLOCK NO. F-10

REF NO	DESCRIPTION	AREA CODE	SERIAL NUMBER FROM	SERIAL NUMBER TO	QTY REQ	PART NUMBER	HONDA CODE
13	BOLT, PIN		-------	-------	2	45131-MA3-006	1012004
14	BOOT B		-------	-------	2	45133-MA3-006	1012012
15	BOOT, PIN		-------	-------	4	45133-166-016	1012020
16	CALIPER ASSY., R. FR. (NISSHIN TT)		-------	-------	1	45200-MJ0-017	1881291
	CALIPER ASSY., R. FR. (NISSHIN TT)		-------	-------	1	45200-MJ0-027	3030293
17	BODY, R. FR. CALIPER		-------	-------	1	45201-MJ0-006	1762038
18	SEAL, PISTON		-------	-------	4	45209-MA7-006	1302314
19	BRACKET COMP., R. FR.		-------	-------	1	45210-MJ0-016	1881309
20	PIN, HANGER		-------	-------	4	45215-MA3-006	1012046
21	PLATE		-------	-------	2	45217-MJ0-006	1743590
22	SLEEVE, FR. CALIPER BRACKET		-------	-------	1	51536-MB2-000	1432277
23	BOLT, SOCKET, 6X25		-------	-------	1	90105-MJ1-000	1692128
24	BOLT, SOCKET, 10X40		-------	-------	1	90131-MB2-000	1431238
25	BOLT, FLANGE, 8X49		-------	-------	2	90180-MA3-006	1053107
26	BOLT, FLANGE, 10X40		-------	-------	2	90180-MB6-000	1750298
27	O-RING D, 13.8X2.4		-------	-------	2	91308-MC7-003	1251552
	O-RING D, 13.8X2.4		-------	-------	2	91311-PH7-003	2373504
28	BOLT, FLANGE, 6X10		-------	-------	3	95700-06010-07	0663930
	BOLT, FLANGE, 6X10		-------	-------	3	95701-06010-07	2374734

CONTENTS

TITLE	GRID
AIR CLEANER	1-E7
ALTERNATOR	1-B8
BATTERY	1-E5
BRAKE CALIPER, FR	1-D10
BRAKE CALIPER, RR	1-E1
BRAKE MASTER CYL. FR	1-D4
BRAKE MASTER CYL. RR	1-D12
CAM CHAIN	1-B5
CAMSHAFT	1-B4
CANISTER (AC)	1-F11
CARBURETOR (ASSY.)	1-C7
CARBURETOR COMPONENTS	1-C8
CHAIN CASE	1-E11
CLUTCH	1-D3
CLUTCH	1-B6
CLUTCH MASTER CYLINDER	1-D5
CONTROL SWITCHES	1-D3
COWL	1-F8
COWL, RR	1-E4
CRANKCASE COVER, L	1-B9
CRANKCASE COVER, R	1-B6
CRANKSHAFT	1-C2
CYLINDER BLOCK	1-B12
CYLINDER HEAD COVER	1-B1
CYLINDER HEAD, FR	1-B1
CYLINDER HEAD, RR	1-B3
FENDER, FR	1-D7
FENDER, RR	1-F1
FRAME BODY	1-F6
FUEL PUMP	1-E6
FUEL TANK	1-E3
GASKET KIT A	1-C9
GASKET KIT B	1-C9
GEARSHIFT DRUM	1-C5
HANDLEBAR	1-D6
HEADLIGHT	1-D1
IGNITION COIL	1-F4
INSTRUMENTS	1-D2
MARK	1-F10
MUFFLER, EXHAUST	1-E8
OIL FILTER	1-B11
OIL PAN	1-B11
OIL PUMP	1-B11
PEDAL, BRAKE	1-E9
PEDAL, GEARSHIFT	1-E9
PISTON	1-C2
PULSE GENERATOR	1-B7
RADIATOR	1-F5
SEAT	1-E4
SHOCK ABSORBER, FR	1-D8
SHOCK ABSORBER, RR	1-E12
SIDE COVER	1-E5
SPARK UNIT	1-F1
STAND	1-E10
STARTER CLUTCH	1-B7
STARTER MOTOR	1-B11
STEERING STEM	1-D7
STEP	1-E9
STRIPE	1-F10
SWINGARM	1-E11
TAILLIGHT	1-F3
TENSIONER	1-B5
THERMOSTAT	1-C6
TOOLS	1-F8
TOP BRIDGE	1-D6
TRANSMISSION	1-C4
TURN SIGNAL	1-F2
VALVE	1-B4
WATER PIPE	1-C6
WATER PUMP	1-B9
WHEEL, FR	1-D11
WHEEL, RR	1-E2
WIRE HARNESS	1-F4

GRID NO.

FRONT WHEEL

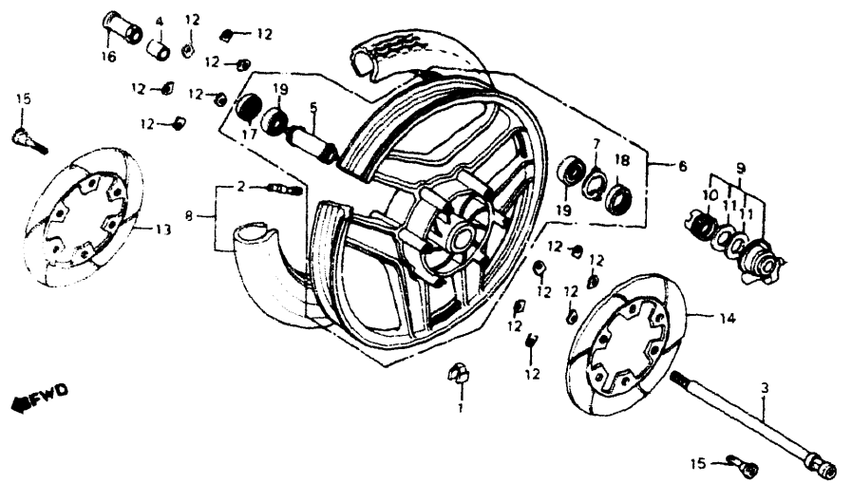

VF1000F 84

G43-BMB6-29

BLOCK NO. F-11

REF NO	DESCRIPTION	AREA CODE	SERIAL NUMBER FROM	SERIAL NUMBER TO	QTY REQ	PART NUMBER	HONDA CODE
1	WEIGHT, BALANCE (10G)		-------	-------	N	42704-MB0-000	1272319
	WEIGHT, BALANCE (20G)		-------	-------	N	42705-MB0-000	1247881
	WEIGHT, BALANCE (30G)		-------	-------	N	42706-MB0-000	1247899
2	VALVE, RIM (BS)		-------	-------	1	42753-425-003	1032465
	VALVE, RIM (DUNLOP)		-------	-------	1	42753-425-004	1041128
3	AXLE, FR. WHEEL		-------	-------	1	44301-MJ1-670	1692136
4	COLLAR, FR. WHEEL SIDE		-------	-------	1	44311-410-000	0482943
	COLLAR, FR. WHEEL SIDE		-------	-------	1	44311-425-870	0757633
5	COLLAR COMP. FR. AXLE DISTANCE		-------	-------	1	44620-MB0-000	1248020
6	WHEEL COMP. FR.		-------	-------	1	44650-MJ1-670	1692151
7	RETAINER, GEAR BOX		-------	-------	1	44680-410-000	0482968
8	TIRE ASSY. FR. (BS)		-------	-------	1	44710-MB6-611	2070720
	TIRE ASSY. FR. (DUNLOP)		-------	-------	1	44710-MB6-612	2070738
	TIRE ASSY. FR. (BS)		-------	-------	1	44710-MB6-671	1720937
	TIRE ASSY. FR. (DUNLOP)		-------	-------	1	44710-MB6-672	1720945
9	BOX ASSY. SPEEDOMETER GEAR		-------	-------	1	44800-MB2-672	2463420
10	GEAR, SPEEDOMETER (26T)		-------	-------	1	44806-MB2-671	1761998
11	WASHER, SPEEDOMETER GEAR		-------	-------	2	44809-402-000	0433896
12	SHIM, DAMPING		-------	-------	12	45128-ME2-003	1390830

SC150* FRAME NO. EM000017 TO EM003753
SC151* FRAME NO. EM000003 TO EM000627

VF1000F 84

BLOCK NO. F-11

REF NO	DESCRIPTION	AREA CODE	SERIAL NUMBER FROM	SERIAL NUMBER TO	QTY REQ	PART NUMBER	HONDA CODE
13	DISK, R. FR. BRAKE		-------	-------	1	45251-MJ1-670	1692201
14	DISK, L. FR. BRAKE		-------	-------	1	45351-MJ1-670	1692219
15	BOLT, FR. DISK, 8X59		-------	-------	12	90105-MF2-000	1390848
	BOLT, FR. DISK, 8X59		-------	-------	12	90106-MF2-010	2045888
16	NUT, AXLE, 14MM		-------	-------	1	90305-MJ1-670	1692227
17	DUST SEAL, 22X42X7		-------	-------	1	91252-MC7-003	1210913
18	DUST SEAL, 40X50X5 (ARAI)		-------	-------	1	91258-410-013	0670992
19	BEARING, RADIAL BALL, 6302U		-------	-------	2	96140-63020-10	0239889
	BEARING, RADIAL BALL, 6302UU		-------	-------	2	96150-63020-10	1213347

CONTENTS

TITLE	GRID
AIR CLEANER	1-E7
ALTERNATOR	1-B8
BATTERY	1-E5
BRAKE CALIPER, FR.	1-D10
BRAKE CALIPER, RR.	1-E1
BRAKE MASTER CYL. FR.	1-D4
BRAKE MASTER CYL. RR.	1-D12
CAM CHAIN	1-B5
CAMSHAFT	1-B4
CANISTER (AC)	1-F11
CARBURETOR (ASSY.)	1-C7
CARBURETOR COMPONENTS	1-C8
CHAIN CASE	1-E11
CLUTCH	1-D3
CLUTCH	1-B6
CLUTCH MASTER CYLINDER	1-D5
CONTROL SWITCHES	1-D3
COWL	1-F8
COWL, RR.	1-E4
CRANKCASE COVER, L	1-B9
CRANKCASE COVER, R	1-B6
CRANKSHAFT	1-C2
CYLINDER BLOCK	1-B12
CYLINDER HEAD COVER	1-B1
CYLINDER HEAD, FR.	1-B1
CYLINDER HEAD, RR.	1-B3
FENDER, FR.	1-D7
FENDER, RR.	1-F[illegible]
FRAME BODY	1-F6
FUEL PUMP	1-E6
FUEL TANK	1-E3
GASKET KIT A	1-C9
GASKET KIT B	1-C9
GEARSHIFT DRUM	1-C5
HANDLEBAR	1-D6
HEADLIGHT	1-D1
IGNITION COIL	1-F4
INSTRUMENTS	1-D2
MARK	1-F10
MUFFLER, EXHAUST	1-E8
OIL FILTER	1-B11
OIL PAN	1-B[illegible]
OIL PUMP	1-B11
PEDAL, BRAKE	1-E9
PEDAL, GEARSHIFT	1-F9
PISTON	1-C2
PULSE GENERATOR	1-B7
RADIATOR	1-F5
SEAT	1-E4
SHOCK ABSORBER, FR.	1-D8
SHOCK ABSORBER, RR.	1-E12
SIDE COVER	1-E5
SPARK UNIT	1-F1
STAND	1-E10
STARTER CLUTCH	1-B7
STARTER MOTOR	1-B11
STEERING STEM	1-D7
STEP	1-E9
STRIPE	1-F10
SWINGARM	1-E11
TAILLIGHT	1-F3
TENSIONER	1-B5
THERMOSTAT	1-C6
TOOLS	1-F8
TOP BRIDGE	1-D6
TRANSMISSION	1-C4
TURN SIGNAL	1-F2
VALVE	1-B4
WATER PIPE	1-C6
WATER PUMP	1-B9
WHEEL, FR.	1-D11
WHEEL, RR.	1-E2
WIRE HARNESS	1-F4

GRID NO.

REAR BRAKE MASTER CYL

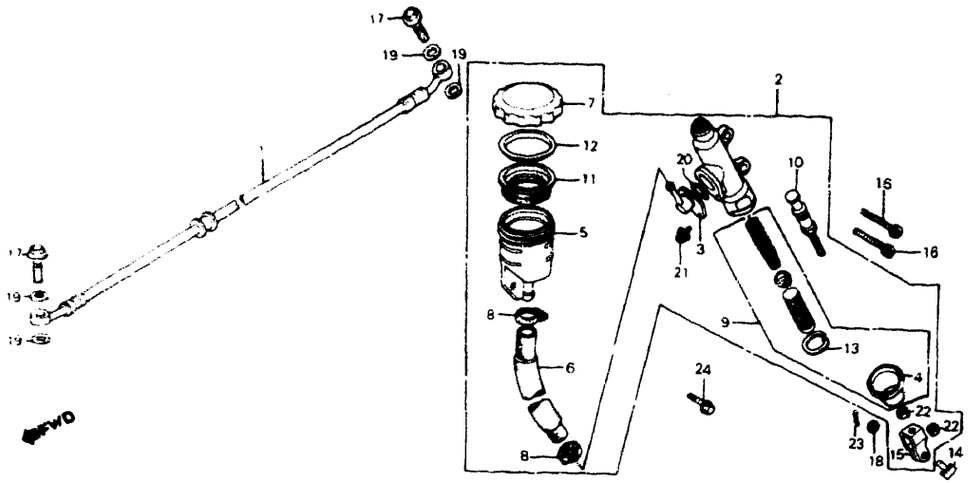

VF1000F 84

G43-8MB6-31

BLOCK NO. F-12

REF NO	DESCRIPTION	AREA CODE	SERIAL NUMBER FROM	SERIAL NUMBER TO	QTY REQ	PART NUMBER	HONDA CODE
1	HOSE, RR BRAKE		-------	-------	1	43310-MB2-013	1792217
2	CYLINDER ASSY, RR BRAKE MASTER		-------	-------	1	43500-MB6-671	1754233
3	CONNECTOr, MASTER CYLINDER		-------	-------	1	43503-MB2-006	1429448
4	BOOT COMP		-------	-------	1	43504-MB2-006	1429455
5	CUP, MASTER CYLINDER C		-------	-------	1	43511-443-761	1217124
6	HOSE, MASTER CYLINDE		-------	-------	1	43512-MB6-671	1754241
7	CAP COMP, OIL CUP		-------	-------	1	43510-MB4-671	1434919
	CAP COMP, OIL CUP		-------	-------	1	43513-MB4-671	1384817
8	CLAMP, MASTER CYLINDER OIL HOSE		-------	-------	2	43514-445-771	0817593
9	PISTON SET, MASTER CYLINDER		-------	-------	1	43520-MB2-305	1429463
10	ROD COMP, PUSH		-------	-------	1	43530-MB2-006	1429471
11	DIAPHRAGM		-------	-------	1	45520-300-000	0194480
12	PLATE, DIAPHRAGM		-------	-------	1	45521-MJ6-006	1764968
	PLATE, DIAPHRAGM		-------	-------	1	45521-300-010	0200733
13	CIRCLIP		-------	-------	1	46182-500-013	0506139
14	PIN, BRAKE ROD		-------	-------	1	46503-MB6-000	1760610
15	JOINT, BRAKE ROD		-------	-------	1	46504-MB2-006	1430149
16	BOLT, SOCKET, 6X22		-------	-------	2	90115-MB2-000	1425198

SC150* FRAME NO EM000017 TO EM003753
SC151* FRAME NO EM000003 TO EM000627

VF1000F'84

BLOCK NO. F-12

REF NO	DESCRIPTION	AREA CODE	SERIAL NUMBER FROM	SERIAL NUMBER TO	QTY REQ	PART NUMBER	HONDA CODE
17	BOLT, OIL, 10X22		-------	-------	2	90145-KM3-750	2072775
	BOLT, OIL, 10X22		-------	-------	2	90145-961-010	1792548
18	WASHER, 7X12		-------	-------	1	90501-310-000	0113654
19	WASHER, OIL BOLT		-------	-------	4	90545-300-000	0189902
20	O-RING, 14.8X2.4		-------	-------	1	91212-422-006	0693481
21	SCREW-WASHER, 4X12		-------	-------	1	93893-04012-18	0954412
22	NUT, HEX., 8MM		-------	-------	2	94002-08000-0S	0156075
23	PIN, SPLIT, 1.6X15		-------	-------	1	94201-16150	0058313
	PIN, SPLIT, 1.6X25		-------	-------	1	94201-16250	0058339
24	BOLT, FLANGE, 6X14		-------	-------	1	95700-06014-00	0671198
	BOLT, FLANGE, 6X14		-------	-------	1	95701-06014-00	2410884

CONTENTS

TITLE	GRID
AIR CLEANER	1-E7
ALTERNATOR	1-B8
BATTERY	1-E5
BRAKE CALIPER, FR	1-D10
BRAKE CALIPER, RR	1-E1
BRAKE MASTER CYL, FR	1-D4
BRAKE MASTER CYL, RR	1-D12
CAM CHAIN	1-B5
CAMSHAFT	1-B4
CANISTER (AC)	1-F11
CARBURETOR (ASSY.)	1-C7
CARBURETOR COMPONENTS	1-C8
CHAIN CASE	1-E11
CLUTCH	1-D3
CLUTCH	1-B6
CLUTCH MASTER CYLINDER	1-D5
CONTROL SWITCHES	1-D3
COWL	1-F8
COWL, RR	1-E4
CRANKCASE COVER, L	1-B9
CRANKCASE COVER, R	1-B6
CRANKSHAFT	1-C2
CYLINDER BLOCK	1-B12
CYLINDER HEAD COVER	1-B1
CYLINDER HEAD, FR	1-B1
CYLINDER HEAD, RR	1-B3
FENDER, FR	1-D7
FENDER, RR	1-F1
FRAME BODY	1-F6
FUEL PUMP	1-E6
FUEL TANK	1-E3
GASKET KIT A	1-C9
GASKET KIT B	1-C9
GEARSHIFT DRUM	1-C5
HANDLEBAR	1-D6
HEADLIGHT	1-D1
IGNITION COIL	1-F4
INSTRUMENTS	1-D2
MARK	1-F10
MUFFLER, EXHAUST	1-E8
OIL FILTER	1-B11
OIL PAN	1-B11
OIL PUMP	1-B11
PEDAL, BRAKE	1-E9
PEDAL, GEARSHIFT	1-E9
PISTON	1-C2
PULSE GENERATOR	1-B7
RADIATOR	1-F5
SEAT	1-E4
SHOCK ABSORBER, FR	1-D8
SHOCK ABSORBER, RR	1-E12
SIDE COVER	1-E5
SPARK UNIT	1-F1
STAND	1-E10
STARTER CLUTCH	1-B7
STARTER MOTOR	1-B11
STEERING STEM	1-D7
STEP	1-E9
STRIPE	1-F10
SWINGARM	1-E11
TAILLIGHT	1-F3
TENSIONER	1-B5
THERMOSTAT	1-C6
TOOLS	1-F8
TOP BRIDGE	1-D6
TRANSMISSION	1-C4
TURN SIGNAL	1-F2
VALVE	1-B4
WATER PIPE	1-C6
WATER PUMP	1-B9
WHEEL, FR	1-D11
WHEEL, RR	1-E2
WIRE HARNESS	1-F4

GRID NO.

REAR BRAKE CALIPER

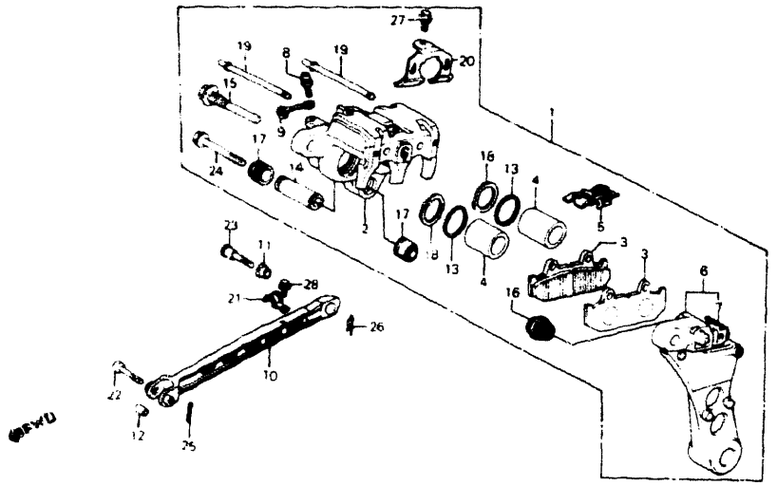

VF1000F 84

G43 BMB5 64

BLOCK NO F-13

REF NO	DESCRIPTION	AREA CODE	SERIAL NUMBER FROM	SERIAL NUMBER TO	QTY REQ	PART NUMBER	HONDA CODE
1	CALIPER ASSY RR (NISSHIN ASK)		-------	-------	1	43100-MB6-007	1749670
	CALIPER ASSY RR (NISSHIN TT)		-------	-------	1	43100-MB6-008	1761980
2	CALIPER COMP RR		-------	-------	1	43101-MB6-006	1754217
3	PAD COMP RR (ASK) (KIT P/N 431A0-MB4-307)		-------	-------	2	43105-MB4-007	1387745
	PAD COMP RR (T T) (KIT P/N 431A0-MB4-307)		-------	-------	2	43105-MB4-008	1387752
	PAD COMP RR (TT) (KIT P/N 431A0-MB4-307)		-------	-------	2	43105-MB6-008	1743400
4	PISTON		-------	-------	2	43107-MA7-006	1302223
5	SPRING PAD		-------	-------	1	43108-MB9-781	1300672
6	BRACKET COMP RR		-------	-------	1	43110-MB6-006	1743418
7	RETAINER RR BRACKET		-------	-------	1	43112-445-631	1092881
8	SCREW BLEEDER		-------	-------	1	43352-568-003	0505735
9	CAP BLEEDER		-------	-------	1	43353-461-771	0954230
10	LINK TORQUE		-------	-------	1	43431-MB2-000	1429422
11	WASHER TORQUE LINK		-------	-------	1	43434-MA3-640	1435445
12	COLLAR LINK		-------	-------	1	43435-MC7-000	1209162

SC150* FRAME NO EM000017 TO EM003753
SC151* FRAME NO EM000003 TO EM000627

VF1000F 84

BLOCK NO F-13

REF NO	DESCRIPTION	AREA CODE	SERIAL NUMBER FROM	SERIAL NUMBER TO	QTY REQ	PART NUMBER	HONDA CODE
13	DUST SEAL		-------	-------	2	45109-MA7-006	1302272
14	SLEEVE		-------	-------	1	45111-MA3-006	1011980
15	BOLT, PIN		-------	-------	1	45131-MA3-006	1012004
16	BOOT B		-------	-------	1	45133-MA3-006	1012012
17	BOOT, PIN		-------	-------	2	45133-166-016	1012020
18	SEAL, PISTON		-------	-------	2	45209-MA7-006	1302314
19	PIN, HANGER		-------	-------	2	45215-MA2-006	1059880
20	PLATE		-------	-------	1	45217-MJ0-006	1743590
21	CLAMP B, RR BRAKE HOSE		-------	-------	1	52115-MB2-000	1425057
22	BOLT, RR BRAKE STOPPER ARM		-------	-------	1	90120-MC7-000	1210772
23	BOLT, TORQUE LINK		-------	-------	1	90121-MA3-640	1435452
24	BOLT, FLANGE, 8X49		-------	-------	1	90180-MA3-006	1053107
25	PIN, SPLIT, 2.0X18		-------	-------	1	94201-20180	0219279
	PIN, SPLIT, 2.0X20		-------	-------	1	94201-20200	0058354
	PIN, SPLIT, 2.0X22		-------	-------	1	94201-20220	0058362
	PIN, SPLIT, 2.0X25		-------	-------	1	94201-20250	0058370
	PIN, SPLIT, 2.0X32		-------	-------	1	94201-20320	0145607
	PIN, SPLIT, 2.0X35		-------	-------	1	94201-20350	0058388
	PIN, SPLIT, 2.0X18		-------	-------	1	94201-29220	1484047
26	PIN, LOCK, 10MM		-------	-------	1	94251-10000	0159269
27	BOLT, FLANGE, 6X10		-------	-------	1	95700-06010-07	0663930
	BOLT, FLANGE, 6X10		-------	-------	1	95701-06010-07	2374734
28	BOLT, FLANGE, 6X12		-------	-------	1	95700-06012-00	0487025
	BOLT, FLANGE, 6X12		-------	-------	1	95701-06012-00	2105799

CONTENTS

TITLE	GRID
AIR CLEANER	1-E7
ALTERNATOR	1-B8
BATTERY	1-E5
BRAKE CALIPER FR	1-D10
BRAKE CALIPER RR	1-E1
BRAKE MASTER CYL FR	1-D4
BRAKE MASTER CYL RR	1-D12
CAM CHAIN	1-B5
CAMSHAFT	1-B4
CANISTER (AC)	1-F11
CARBURETOR (ASSY)	1-C7
CARBURETOR COMPONENTS	1-C8
CHAIN CASE	1-E11
CLUTCH	1-D3
CLUTCH	1-B6
CLUTCH MASTER CYLINDER	1-D5
CONTROL SWITCHES	1-D3
COWL	1-F8
COWL RR	1-E4
CRANKCASE COVER L	1-B9
CRANKCASE COVER R	1-B6
CRANKSHAFT	1-C2
CYLINDER BLOCK	1-B12
CYLINDER HEAD COVER	1-B1
CYLINDER HEAD FR	1-B1
CYLINDER HEAD RR	1-B3
FENDER FR	1-D7
FENDER RR	1-F1
FRAME BODY	1-F6
FUEL PUMP	1-E6
FUEL TANK	1-E3
GASKET KIT A	1-C9
GASKET KIT B	1-C9
GEARSHIFT DRUM	1-C5
HANDLEBAR	1-D6
HEADLIGHT	1-D1
IGNITION COIL	1-F4
INSTRUMENTS	1-D2
MARK	1-F10
MUFFLER EXHAUST	1-E8
OIL FILTER	1-B11
OIL PAN	1-B11
OIL PUMP	1-B11
PEDAL BRAKE	1-E9
PEDAL GEARSHIFT	1-E9
PISTON	1-C2
PULSE GENERATOR	1-B7
RADIATOR	1-F5
SEAT	1-E4
SHOCK ABSORBER FR	1-D8
SHOCK ABSORBER RR	1-E12
SIDE COVER	1-E5
SPARK UNIT	1-F1
STAND	1-E10
STARTER CLUTCH	1-B7
STARTER MOTOR	1-B11
STEERING STEM	1-D7
STEP	1-E9
STRIPE	1-F10
SWINGARM	1-E11
TAILLIGHT	1-F3
TENSIONER	1-B5
THERMOSTAT	1-C6
TOOLS	1-F8
TOP BRIDGE	1-D6
TRANSMISSION	1-C4
TURN SIGNAL	1-F2
VALVE	1-B4
WATER PIPE	1-C6
WATER PUMP	1-B9
WHEEL FR	1-D11
WHEEL RR	1-E2
WIRE HARNESS	1-F4

GRID NO.

REAR WHEEL

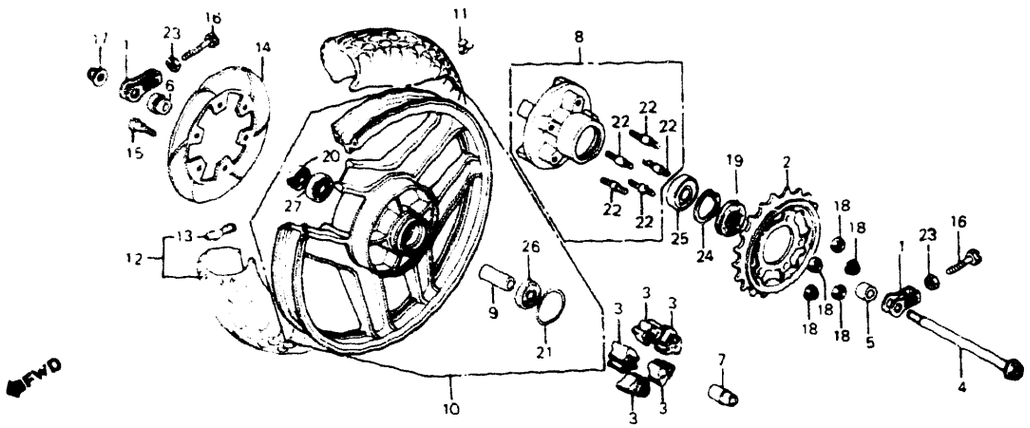

VF1000F '84

G43 BMB6-32

BLOCK NO F-14

REF NO	DESCRIPTION	AREA CODE	SERIAL NUMBER FROM	SERIAL NUMBER TO	QTY REQ	PART NUMBER	HONDA CODE
1	ADJUSTER DRIVE CHAIN		-------	-------	2	40543-MB6-000	1754167
2	SPROCKET COMP FINAL DRIVEN (43T)		-------	-------	1	41200-445-000	1761956
3	DAMPER RR WHEEL		-------	-------	5	41241-MA6-000	1224773
4	AXLE RR WHEEL		-------	-------	1	42301-MB2-000	1429323
5	COLLAR RR WHEEL SIDE		-------	-------	1	42311-MB2-000	1429331
6	COLLAR RR BRAKE PANEL SIDE		-------	-------	1	42313-422-000	0693622
7	SLEEVE RR AXLE		-------	-------	1	42605-393-000	0445742
8	FLANGE COMP FINAL DRIVEN		-------	-------	1	42610-MJ0-000	1761964
9	COLLAR RR AXLE DISTANCE		-------	-------	1	42620-MJ0-000	1761972
10	WHEEL COMP RR		-------	-------	1	42650-MB6-670	1749662
11	WEIGHT BALANCE (10G)		-------	-------	N	42704-MB0-000	1272319
	WEIGHT BALANCE (20G)		-------	-------	N	42705-MB0-000	1247881
	WEIGHT BALANCE (30G)		-------	-------	N	42706-MB0-000	1247899
12	TIRE ASSY RR (BS)		-------	-------	1	42710-MB6-611	2070464
	TIRE ASSY RR (DUNLOP)		-------	-------	1	42710-MB6-612	2070472
	TIRE ASSY RR (BS)		-------	-------	1	42710-MB6-781	1747369
	TIRE ASSY RR (DUNLOP)		-------	-------	1	42710-MB6-782	1747377
13	VALVE RIM (BS)		-------	-------	1	42753-425-003	1032465
	VALVE RIM (DUNLOP)		-------	-------	1	42753-425-004	1041128

1-E 2

SC150* FRAME NO EM000017 TO EM003753
SC151* FRAME NO EM000003 TO EM000627

VF1000F '84

BLOCK NO F-14

REF NO	DESCRIPTION	AREA CODE	SERIAL NUMBER FROM	SERIAL NUMBER TO	QTY REQ	PART NUMBER	HONDA CODE
14	DISK, RR BRAKE		-------	-------	1	43351-MJ0-000	1743434
15	BOLT, FR DISK, 8X33		-------	-------	6	90105-MB0-000	1250901
	BOLT, FR DISK, 8X33		-------	-------	6	90105-MB0-010	2028785
16	BOLT, CHAIN ADJUSTING		-------	-------	2	90119-438-000	0765602
17	NUT, FLANGE, 18MM		-------	-------	1	90305-MB4-003	1384957
18	NUT, FLANGE, 12MM		-------	-------	5	90309-375-003	0384461
19	OIL SEAL, 34X62.2X7		-------	-------	1	90753-MG5-670	1311190
20	DUST SEAL, 30X52X7		-------	-------	1	91253-442-003	0827337
21	O-RING, 6[illegible]		-------	-------	1	91302-MA6-003	1237213
22	BOLT, STUD, 12X50		-------	-------	5	92716-12050-0E	1776632
23	NUT, HEX., 10MM		-------	-------	2	94001-10000-0S	0145391
24	CIRCLIP, INTERNAL, 62MM		-------	-------	1	94520-62000	0906594
25	BEARING, RADIAL BALL, 6305U		-------	-------	1	96140-63050-10	0257808
26	BEARING, RADIAL BALL, 6204		-------	-------	1	96150-6204C-10	1050483
27	BEARING, RADIAL BALL, 6304UU		-------	-------	1	96150-63040-10	0486068

CONTENTS

TITLE	GRID
AIR CLEANER	1-E7
ALTERNATOR	1-B2
BATTERY	1-E5
BRAKE CALIPER FR	1-D10
BRAKE CALIPER RR	1-E1
BRAKE MASTER CYL FR	1-D4
BRAKE MASTER CYL RR	1-C12
CAM CHAIN	1-B5
CAMSHAFT	1-B4
CANISTER (AC)	1-F11
CARBURETOR (ASSY)	1-C7
CARBURETOR COMPONENTS	1-C8
CHAIN CASE	1-E11
CLUTCH	1-D3
CLUTCH	1-B6
CLUTCH MASTER CYLINDER	1-D5
CONTROL SWITCHES	1-D3
COWL	1-F8
COWL RR	1-E4
CRANKCASE COVER L	1-B9
CRANKCASE COVER R	1-B6
CRANKSHAFT	1-C2
CYLINDER BLOCK	1-B12
CYLINDER HEAD COVER	1-B1
CYLINDER HEAD FR	1-B1
CYLINDER HEAD RR	1-B3
FENDER FR	1-D7
FENDER RR	1-F1
FRAME BODY	1-F6
FUEL PUMP	1-E6
FUEL TANK	1-E3
GASKET KIT A	1-C9
GASKET KIT B	1-C9
GEARSHIFT DRUM	1-C5
HANDLEBAR	1-D6
HEADLIGHT	1-D1
IGNITION COIL	1-F4
INSTRUMENTS	1-D2
MARK	1-F10
MUFFLER EXHAUST	1-E8
OIL FILTER	1-B11
OIL PAN	1-B11
OIL PUMP	1-B11
PEDAL BRAKE	1-E9
PEDAL GEARSHIFT	1-E9
PISTON	1-C2
PULSE GENERATOR	1-B7
RADIATOR	1-F5
SEAT	1-E4
SHOCK ABSORBER FR	1-D8
SHOCK ABSORBER RR	1-E12
SIDE COVER	1-E5
SPARK UNIT	1-F1
STAND	1-E10
STARTER CLUTCH	1-B7
STARTER MOTOR	1-B11
STEERING STEM	1-D7
STEP	1-E9
STRIPE	1-F10
SWINGARM	1-E11
TAILLIGHT	1-F3
TENSIONER	1-B5
THERMOSTAT	1-C6
TOOLS	1-F8
TOP BRIDGE	1-D6
TRANSMISSION	1-C4
TURN SIGNAL	1-F2
VALVE	1-B4
WATER PIPE	1-C6
WATER PUMP	1-B9
WHEEL FR	1-D11
WHEEL RR	1-E2
WIRE HARNESS	1-F4

GRID NO.

1-E 2

FUEL TANK

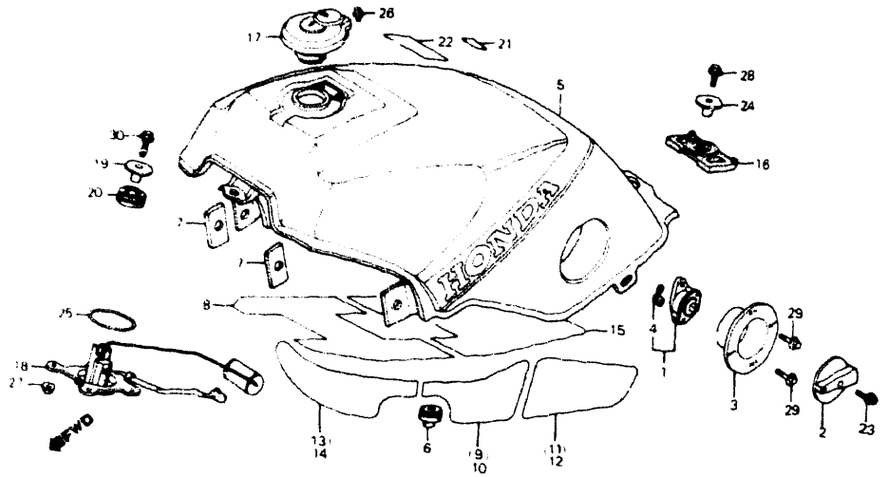

CAUTION OR WARNING LABELS MUST BE ORDERED SEPARATELY WHEN APPLICABLE

VF1000F 84 — G43-BMB6-65 — BLOCK NO F-15

REF NO	DESCRIPTION	AREA CODE	SERIAL NUMBER FROM	SERIAL NUMBER TO	QTY REQ	PART NUMBER	HONDA CODE
1	VALVE ASSY., FUEL		-------	-------	1	16950-MB2-013	1523893
2	LEVER, FUEL VALVE		-------	-------	1	16952-MB2-000	1427434
	LEVER, FUEL VALVE		-------	-------	1	16952-MJ4-870	2300002
3	BASE, FUEL VALVE		-------	-------	1	16953-MB2-000	1427442
	BASE, FUEL VALVE		-------	-------	1	16953-MB2-010	1853571
4	GASKET		-------	-------	1	16958-MB4-005	1385251
5	TANK SET, FUEL *NH138* (SHASTA WHITE)	A	-------	-------	1	175A1-MB6-670ZA	1752823
	TANK SET, FUEL *NH138* (SHASTA WHITE)	AC	-------	-------	1	175A1-MB6-740ZA	1752831
6	RUBBER, FUEL TANK SIDE		-------	-------	2	17516-MB6-000	1748607
7	RUBBER, FR. COWL SIDE		-------	-------	2	17517-MB6-000	1748615
8	GUARD A, FUEL TANK HEAT	AC	-------	-------	1	17523-MB6-740	1808518
9	GUARD B, R. FUEL TANK HEAT	AC	-------	-------	1	17524-MB6-740	1808526
10	GUARD B, L. FUEL TANK HEAT	AC	-------	-------	1	17525-MB6-740	1808534
11	GUARD C, R. FUEL TANK HEAT	AC	-------	-------	1	17526-MB6-740	1799485
12	GUARD C, L. FUEL TANK HEAT	AC	-------	-------	1	17527-MB6-740	1799493
13	GUARD D, R. FUEL TANK HEAT	AC	-------	-------	1	17528-MB6-740	1799501
14	GUARD D, L. FUEL TANK HEAT	AC	-------	-------	1	17529-MB6-740	1799519
15	GUARD E, FUEL TANK HEAT	AC	-------	-------	1	17533-MB6-740	1799535

SC150* FRAME NO. EM000017 TO EM003753
SC151* FRAME NO. EM000003 TO EM000627

VF1000F 84 — BLOCK NO. F-15

REF NO	DESCRIPTION	AREA CODE	SERIAL NUMBER FROM	SERIAL NUMBER TO	QTY REQ	PART NUMBER	HONDA CODE
16	CUSHION, FUEL TANK RR		-------	-------	1	17613-MA5-771	1275569
17	CAP COMP., FUEL FILLER	A	-------	-------	1	17620-MB2-000	1427699
	CAP COMP., FUEL FILLER	A	-------	-------	1	17620-MB2-013	1557438
	CAP COMP., FUEL FILLER	A	-------	-------	1	17620-MB2-023	2892214
	CAP COMP., FUEL FILLER	AC	-------	-------	1	17620-MB2-881	1696343
18	FUEL UNIT		-------	-------	1	37800-MB6-000	1749639
	FUEL UNIT		-------	-------	1	37800-MB6-010	3418142
19	COLLAR, FR. FENDER		-------	-------	1	61104-357-000	0321752
	COLLAR, FR. FENDER		-------	-------	1	61104-428-000	0687558
	COLLAR, FR. FENDER		-------	-------	1	61105-428-000	0686782
20	RUBBER, TAILLIGHT MOUNTING		-------	-------	1	84703-425-000	0719229
21	LABEL, FR. FORK CAUTION *NH1* (BLACK)		-------	-------	1	87517-MB0-770ZA	1396084
22	LABEL, DRIVE CAUTION *NH1* (BLACK)		-------	-------	1	87560-181-760	1080183
	LABEL, DRIVE CAUTION *NH1* (BLACK)		-------	-------	1	87560-181-760ZD	1223437
23	BOLT, SOCKET, 4X13		-------	-------	1	90102-MB2-000	1425206
	BOLT, SOCKET, 4X13		-------	-------	1	90102-MB2-505	3535648
24	COLLAR, FUEL TANK SETTING		-------	-------	1	90324-MB6-000	1761279
25	O-RING, 39.5X5		-------	-------	1	91305-MC7-000	1213214
26	SCREW-WASHER, 4X6		-------	-------	2	93892-04006-00	0475046
27	NUT, FLANGE, 6MM		-------	-------	4	94050-06080	0612689
28	BOLT, FLANGE, 8X25		-------	-------	1	95700-08025-08	0371997
	BOLT, FLANGE, 8X25		-------	-------	1	95701-08025-08	2563252
29	BOLT, FLANGE, 6X16		-------	-------	2	96000-06016-00	1113687
	BOLT, FLANGE, 6X16		-------	-------	2	96001-06016-00	2105955
30	BOLT, FLANGE, 6X20		-------	-------	1	96000-06020-02	1113695
	BOLT, FLANGE, 6X20		-------	-------	1	96001-06020-02	2867182

CONTENTS

TITLE	GRID
AIR CLEANER	1-E7
ALTERNATOR	1-B8
BATTERY	1-E5
BRAKE CALIPER, FR	1-D10
BRAKE CALIPER, RR	1-E1
BRAKE MASTER CYL., FR	1-D4
BRAKE MASTER CYL., RR	1-D12
CAM CHAIN	1-B5
CAMSHAFT	1-B4
CANISTER (AC)	1-F11
CARBURETOR (ASSY.)	1-C7
CARBURETOR COMPONENTS	1-C8
CHAIN CASE	1-E11
CLUTCH	1-D3
CLUTCH	1-B6
CLUTCH MASTER CYLINDER	1-D5
CONTROL SWITCHES	1-D3
COWL	1-F8
COWL, RR	1-E4
CRANKCASE COVER, L	1-B9
CRANKCASE COVER, R	1-B6
CRANKSHAFT	1-C2
CYLINDER BLOCK	1-B12
CYLINDER HEAD COVER	1-B1
CYLINDER HEAD, FR	1-B1
CYLINDER HEAD, RR	1-B3
FENDER, FR	1-D7
FENDER, RR	1-F1
FRAME BODY	1-F6
FUEL PUMP	1-E6
FUEL TANK	1-E3
GASKET KIT A	1-C9
GASKET KIT B	1-C9
GEARSHIFT DRUM	1-C5
HANDLEBAR	1-D6
HEADLIGHT	1-D1
IGNITION COIL	1-F4
INSTRUMENTS	1-D2
MARK	1-F10
MUFFLER, EXHAUST	1-E8
OIL FILTER	1-B11
OIL PAN	1-B11
OIL PUMP	1-B11
PEDAL, BRAKE	1-E9
PEDAL, GEARSHIFT	1-E9
PISTON	1-C2
PULSE GENERATOR	1-B7
RADIATOR	1-F5
SEAT	1-E4
SHOCK ABSORBER, FR	1-D8
SHOCK ABSORBER, RR	1-E12
SIDE COVER	1-E5
SPARK UNIT	1-F1
STAND	1-E10
STARTER CLUTCH	1-B7
STARTER MOTOR	1-B11
STEERING STEM	1-D7
STEP	1-E9
STRIPE	1-F10
SWINGARM	1-E11
TAILLIGHT	1-F3
TENSIONER	1-B5
THERMOSTAT	1-C6
TOOLS	1-F8
TOP BRIDGE	1-D6
TRANSMISSION	1-C4
TURN SIGNAL	1-F2
VALVE	1-B4
WATER PIPE	1-C6
WATER PUMP	1-B9
WHEEL, FR	1-D11
WHEEL, RR	1-E2
WIRE HARNESS	1-F4

GRID NO.

1-E 3

SEAT • REAR COWL

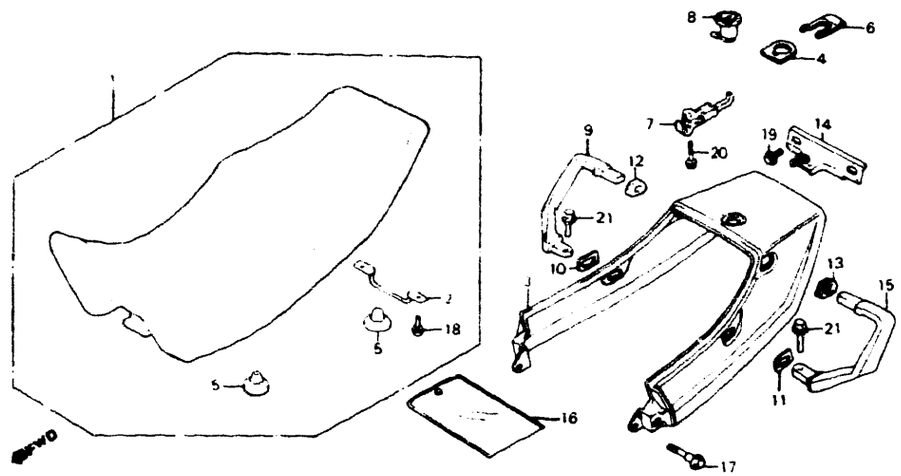

VF1000F 84

G43-BMB6-54

BLOCK NO F-16

REF NO	DESCRIPTION	AREA CODE	SERIAL NUMBER FROM	TO	QTY REQ	PART NUMBER	HONDA CODE
	SEAT ASSY DOUBLE "B43L" (LUSTER BLUE)		-------	-------	1	77100-MB6-670ZA	1754936
2	BAR SEAT LOCK		-------	-------	1	77102-MB2-300	1474097
3	COWL SET RR "NH138 TYPE1"		-------	-------	1	772A0-MB6-000 A	1755008
4	PLATE SEAT LOCK		-------	-------	1	77207-MB2-00C	1425131
5	RUBBER SEAT STOPPER		-------	-------	2	77211-MB0-000	1250182
6	SPRING LOCK KEY SETTING		-------	-------	1	77211-MB2-000	1441955
7	HOOK SEAT CATCH		-------	-------	1	77220-MB2-003	1430735
8	LOCK ASSY SEAT		-------	-------	1	77225-ME4-003	1380732
9	GRIP R RR		-------	-------	1	77330-MB2-000	1430743
10	RUBBER R RR GRIP (A)		-------	-------	1	77331-MB2-000	1441963
11	RUBBER L RR GRIP (A)		-------	-------	1	77332-MB2-000	1430750
12	RUBBER R RR GRIP (B)		-------	-------	1	77333-MB2-000	1430768
13	RUBBER L RR GRIP (B)		-------	-------	1	77334-MB2-000	1430776
14	JOINT RR GRIP		-------	-------	1	77335-MB2-000	1430784
15	GRIP L RR		-------	-------	1	77340-MB2-000	1430792
16	BAG OWNERS MANUAL		-------	-------	1	83642-171-000	0939397
17	BOLT FLANGE 6MM		-------	-------	2	90111-187-000	1032069
18	SCREW-WASHER 4X8		-------	-------	2	93891-04008-08	0995894
19	BOLT FLANGE 6X16		-------	-------	2	95700-06016-08	0252262

SC150* FRAME NO EM000017 TO EM003753
SC151* FRAME NO EM000003 TO EM000627

VF1000F 84

BLOCK NO F-16

REF NO	DESCRIPTION	AREA CODE	SERIAL NUMBER FROM	TO	QTY REQ	PART NUMBER	HONDA CODE
19	BOLT, FLANGE, 6X16		-------	-------	2	95701-06016-08	2105807
	BOLT, FLANGE, 6X16		-------	-------	2	95900-06016-08	1484690
20	BOLT, FLANGE, 6X25		-------	-------	1	95700-06025-08	0258731
	BOLT, FLANGE, 6X25		-------	-------	1	95701-06025-08	2259711
21	BOLT, FLANGE, 8X20		-------	-------	2	95700-08020-07	1213339

CONTENTS

TITLE	GRID
AIR CLEANER	1-E7
ALTERNATOR	1-B8
BATTERY	1-E5
BRAKE CALIPER, FR	1-D10
BRAKE CALIPER, RR	1-E1
BRAKE MASTER CYL. FR	1-D4
BRAKE MASTER CYL. RR	1-D12
CAM CHAIN	1-B5
CAMSHAFT	1-B4
CANISTER (AC)	1-F11
CARBURETOR (ASSY.)	1-C7
CARBURETOR COMPONENTS	1-C8
CHAIN CASE	1-E11
CLUTCH	1-D3
CLUTCH	1-B6
CLUTCH MASTER CYLINDER	1-D5
CONTROL SWITCHES	1-D3
COWL	1-F8
COWL RR	1-E4
CRANKCASE COVER L	1-B9
CRANKCASE COVER R	1-B6
CRANKSHAFT	1-C2
CYLINDER BLOCK	1-B12
CYLINDER HEAD COVER	1-B1
CYLINDER HEAD FR	1-B1
CYLINDER HEAD RR	1-B3
FENDER FR	1-D7
FENDER, RR	1-F1
FRAME BODY	1-F6
FUEL PUMP	1-E6
FUEL TANK	1-E3
GASKET KIT A	1-C9
GASKET KIT B	1-C9
GEARSHIFT DRUM	1-C5
HANDLEBAR	1-D6
HEADLIGHT	1-D1
IGNITION COIL	1-F4
INSTRUMENTS	1-D2
MARK	1-F10
MUFFLER, EXHAUST	1-E8
OIL FILTER	1-B11
OIL PAN	1-B11
OIL PUMP	1-B11
PEDAL, BRAKE	1-E9
PEDAL, GEARSHIFT	1-E9
PISTON	1-C2
PULSE GENERATOR	1-B7
RADIATOR	1-F5
SEAT	1-E4
SHOCK ABSORBER, FR	1-D8
SHOCK ABSORBER RR	1-E12
SIDE COVER	1-E5
SPARK UNIT	1-F1
STAND	1-E10
STARTER CLUTCH	1-B7
STARTER MOTOR	1-B11
STEERING STEM	1-D7
STEP	1-E9
STRIPE	1-F10
SWINGARM	1-E11
TAILLIGHT	1-F3
TENSIONER	1-B5
THERMOSTAT	1-C6
TOOLS	1-F8
TOP BRIDGE	1-D6
TRANSMISSION	1-C4
TURN SIGNAL	1-F2
VALVE	1-B4
WATER PIPE	1-C6
WATER PUMP	1-B9
WHEEL, FR	1-D11
WHEEL, RR	1-E2
WIRE HARNESS	1-F4

GRID NO.

SIDE COVER • BATTERY

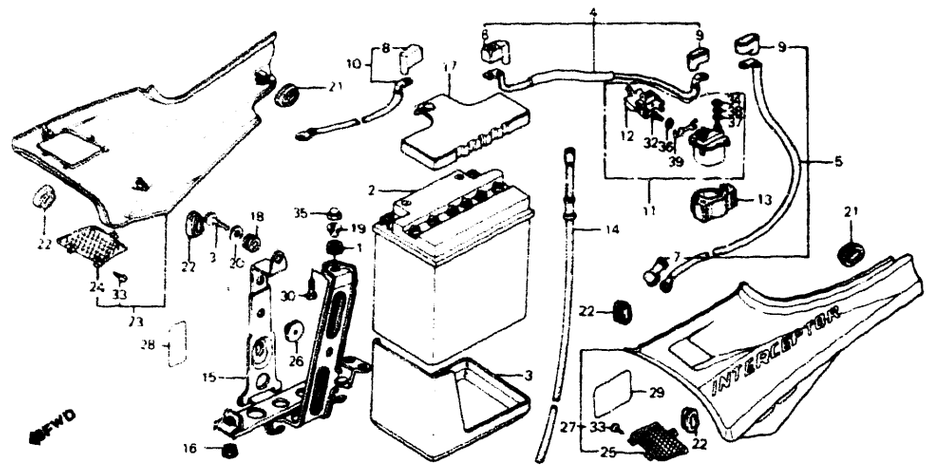

CAUTION OR WARNING LABELS MUST BE ORDERED SEPARATELY WHEN APPLICABLE

VF1000F 84 — G43-BMB6-36 — BLOCK NO. F-17

REF NO	DESCRIPTION	AREA CODE	SERIAL NUMBER FROM	SERIAL NUMBER TO	QTY REQ	PART NUMBER	HONDA CODE
1	RUBBER, AIR CLEANER CASE MOUNTING		-------	-------	1	17245-107-010	0213462
2	BATTERY ASSY		-------	-------	1	31500-MB6-671	1776681
	BATTERY ASSY		-------	-------	1	31500-MB6-672	1736412
3	CUSHION, BATTERY		-------	-------	1	31521-MB6-000	1749282
4	CABLE, BATTERY STARTER		-------	-------	1	32401-MB6-000	1749316
5	CABLE, STARTER MOTOR		-------	-------	1	32402-MB6-000	1753938
6	COVER, BATTERY TERMINAL		-------	-------	1	32411-MB6-000	1749324
7	COVER, STARTER MOTOR TERMINAL		-------	-------	1	32411-230-000	0208652
	COVER, STARTER MOTOR TERMINAL		-------	-------	1	32411-253-000	0177360
8	COVER, BATTERY TERMINAL		-------	-------	1	32412-MB6-000	1749332
9	COVER A, MAGNETIC SWITCH		-------	-------	2	32412-443-900	1234814
10	CABLE, BATTERY EARTH		-------	-------	1	32601-MB6-000	1749340
11	SWITCH ASSY., STARTER MAGNETIC		-------	-------	1	35850-MB0-007	1246958
12	COVER, FUSE		-------	-------	1	35852-MB0-007	1246966
13	RUBBER, MAGNETIC SHOCK		-------	-------	1	35856-MB0-007	1246974
14	TUBE, BATTERY		-------	-------	1	50238-MB2-000	1435486
15	BOX COMP., BATTERY		-------	-------	1	50320-MB6-000	1749795
16	RUBBER, BATTERY BOX MOUNTING		-------	-------	2	50324-MB2-000	1413145
17	CUSHION, BATTERY UPPER		-------	-------	1	50327-MB6-000	1749811

SC150* FRAME NO. EM000017 TO EM003753
SC151* FRAME NO. EM000003 TO EM000627

VF1000F 84 — BLOCK NO. F-17

REF NO	DESCRIPTION	AREA CODE	SERIAL NUMBER FROM	SERIAL NUMBER TO	QTY REQ	PART NUMBER	HONDA CODE
18	GROMMET		-------	-------	1	50329-MB2-000	1430248
19	COLLAR, FR. FENDER		-------	-------	1	61104-357-000	0321752
	COLLAR, FR. FENDER		-------	-------	1	61104-428-000	0687558
	COLLAR, FR. FENDER		-------	-------	1	61105-428-000	0686782
20	WASHER, SEAT MOUNTING		-------	-------	1	77302-124-000	0398362
21	GROMMET, AIR CLEANER CASE		-------	-------	2	83551-GE2-000	1406164
22	GROMMET, AIR CLEANER CASE		-------	-------	4	83551-300-000	0204990
23	COVER SET, R. SIDE *NH138* (SHASTA WHITE)		-------	-------	1	836A0-MB6-670ZA	1755131
24	GRILL, R. SIDE COVER		-------	-------	1	83602-MB6-300	1808542
25	GRILL, L. SIDE COVER		-------	-------	1	83603-MB6-300	1808559
26	RUBBER, BATTERY BOX		-------	-------	2	83618-323-000	0255810
27	COVER SET, L. SIDE *NH138* (SHASTA WHITE)		-------	-------	1	837A0-MB6-670ZA	1755172
28	LABEL, BATTERY CAUTION		-------	-------	1	87506-MB6-300	1761063
29	LABEL, RADIATOR CAUTION		-------	-------	1	87508-415-670	0670471
30	BOLT, SPECIAL, 6X20		-------	-------	1	90008-MB2-000	1442003
31	BOLT, SPECIAL, 6X14		-------	-------	1	90011-729-000	0937615
32	SCREW, PAN, 4X6		-------	-------	2	93500-04006-1H	0753962
33	SCREW, TAPPING, 4X10		-------	-------	6	93901-34220	0737908
34	NUT, HEX., 6MM THIN		-------	-------	2	94002-06000-0S	0181032
35	NUT, CAP, 6MM		-------	-------	1	94021-06000-0S	0203620
	NUT, CAP, 6MM		-------	-------	1	94021-06020	0057893
	NUT, CAP, 6MM		-------	-------	1	94021-06020-0S	0169516
	NUT, CAP, 6MM		-------	-------	1	94022-06020	0203109
36	WASHER, PLAIN, 4MM		-------	-------	2	94101-04800	0331462
37	WASHER, PLAIN, 6MM		-------	-------	2	94101-06800	0345900
38	WASHER, SPRING, 6MM		-------	-------	2	94111-06800	0258210
39	FUSE F (30A)		-------	-------	1	98200-53000	0412676

CONTENTS

TITLE	GRID
AIR CLEANER	1-E7
ALTERNATOR	1-B8
BATTERY	1-E5
BRAKE CALIPER, FR	1-D10
BRAKE CALIPER, RR	1-E
BRAKE MASTER CYL, FR	1-D4
BRAKE MASTER CYL, RR	1-D12
CAM CHAIN	1-B5
CAMSHAFT	1-B4
CANISTER (AC)	1-F11
CARBURETOR (ASSY.)	1-C7
CARBURETOR COMPONENTS	1-C8
CHAIN CASE	1-E11
CLUTCH	1-D3
CLUTCH	1-B6
CLUTCH MASTER CYLINDER	1-D5
CONTROL SWITCHES	1-D3
COWL	1-F8
COWL, RR	1-E4
CRANKCASE COVER, L	1-B9
CRANKCASE COVER, R	1-B6
CRANKSHAFT	1-C2
CYLINDER BLOCK	1-B12
CYLINDER HEAD COVER	1-B1
CYLINDER HEAD, FR	1-B1
CYLINDER HEAD, RR	1-B3
FENDER, FR	1-D7
FENDER, RR	1-F1
FRAME BODY	1-F6
FUEL PUMP	1-E6
FUEL TANK	1-E3
GASKET KIT A	1-C9
GASKET KIT B	1-C9
GEARSHIFT DRUM	1-C5
HANDLEBAR	1-D6
HEADLIGHT	1-D1
IGNITION COIL	1-F4
INSTRUMENTS	1-D2
MARK	1-F10
MUFFLER, EXHAUST	1-E8
OIL FILTER	1-B11
OIL PAN	1-B11
OIL PUMP	1-B11
PEDAL, BRAKE	1-E9
PEDAL, GEARSHIFT	1-E9
PISTON	1-C2
PULSE GENERATOR	1-B7
RADIATOR	1-F5
SEAT	1-E4
SHOCK ABSORBER, FR	1-D8
SHOCK ABSORBER, RR	1-E12
SIDE COVER	1-E5
SPARK UNIT	1-F1
STAND	1-E10
STARTER CLUTCH	1-B7
STARTER MOTOR	1-B11
STEERING STEM	1-D7
STEP	1-E9
STRIPE	1-F10
SWINGARM	1-E11
TAILLIGHT	1-F3
TENSIONER	1-B5
THERMOSTAT	1-C6
TOOLS	1-F8
TOP BRIDGE	1-D6
TRANSMISSION	1-C4
TURN SIGNAL	1-F2
VALVE	1-B4
WATER PIPE	1-C6
WATER PUMP	1-B9
WHEEL, FR	1-D11
WHEEL, RR	1-E2
WIRE HARNESS	1-F4

GRID NO.

1-E 5

FUEL PUMP

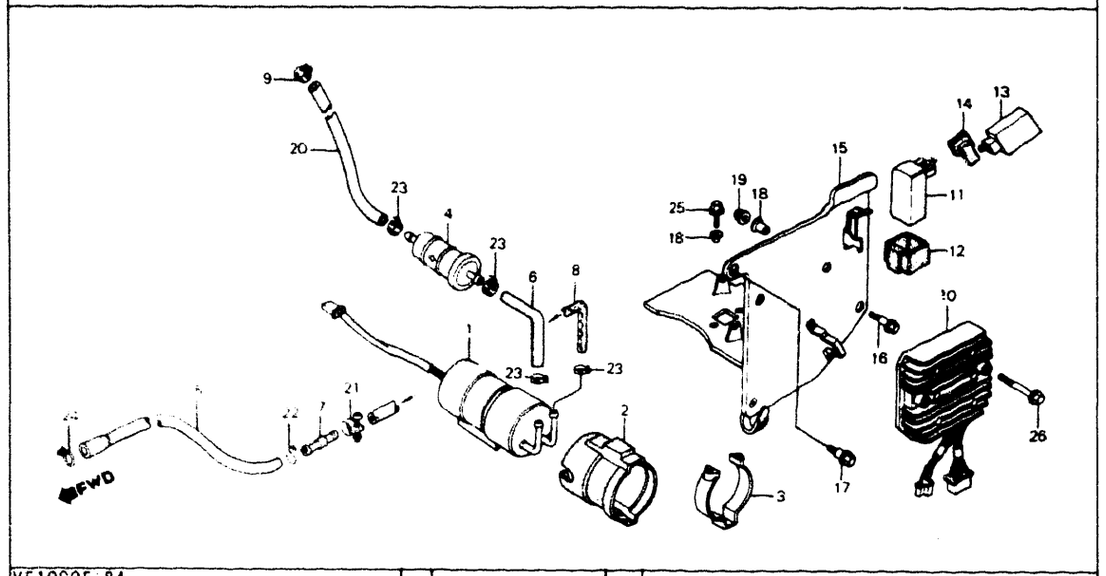

VF1000F '84

G43 8MB6-37

BLOCK NO. F-18

REF NO	DESCRIPTION	AREA CODE	SERIAL NUMBER FROM	TO	QTY REQ	PART NUMBER	HONDA CODE
1	PUMP ASSY., FUEL		-------	-------	1	16700-MB6-005	1748425
2	CUSHION, FUEL PUMP		-------	-------	1	16711-MB6-000	1748441
3	HOLDER, FUEL PUMP		-------	-------	1	16712-MB6-000	1748458
4	STRAINER COMP., FUEL		-------	-------	1	16900-371-004	0404327
5	TUBE, FUEL, 7.3X235		-------	-------	1	16956-MB2-000	1424811
6	TUBE, FUEL		-------	-------	1	16958-MB6-000	1748466
7	JOINT, FUEL TUBE		-------	-------	1	16959-MB1-000	1244375
8	HOSE, FUEL, 5.3X430		-------	-------	1	16960-MB6-000	1799345
9	CLIP, FUEL HOSE		-------	-------	1	16969-MB1-000	1244383
10	RECTIFIER ASSY., REGULATE		-------	-------	1	31600-MB0-008	1246164
11	RELAY, FUEL CUT		-------	-------	1	36100-MB1-701	1291426
12	SUSPENSION, FUEL CUT RELAY		-------	-------	1	36101-MB1-000	1246990
13	RELAY COMP., TURN SIGNAL		-------	-------	1	38301-MF8-772	1806793
	RELAY COMP., TURN SIGNAL		-------	-------	1	38301-MF8-773	1833284
14	SUSPENSION, TURN SIGNAL RELAY		-------	-------	1	38306-KJ6-740	1514900
15	PANEL, ELECTRIC		-------	-------	1	50325-MB6-000	1749803
16	BOLT, FLANGE, 6MM		-------	-------	1	90111-162-000	0811141
17	BOLT, FLANGE, 6X20		-------	-------	1	90113-449-000	0790147
18	COLLAR, GEARSHIFT LEVER MOUNT		-------	-------	4	90522-170-700	0941138

SC150* FRAME NO. EM000017 TO EM003753
SC151* FRAME NO. EM000003 TO EM000627

VF1000F '84

BLOCK NO. F-18

REF NO	DESCRIPTION	AREA CODE	SERIAL NUMBER FROM	TO	QTY REQ	PART NUMBER	HONDA CODE
19	NUT, CAP, 6MM		-------	-------	2	94021-00000-0S	0203620
	NUT, CAP, 6MM		-------	-------	2	94021-06020	0057893
	NUT, CAP, 6MM		-------	-------	2	94021-06020-0S	0169516
	NUT, CAP, 6MM		-------	-------	2	94022-06020	0203109
20	HOSE, FUEL, 5.3X280		-------	-------	1	95001-55280-20	1762285
21	CLIP A12, TUBE		-------	-------	1	95002-01120	0262063
22	CLIP B10, TUBE		-------	-------	1	95002-02100	0250985
23	CLIP D10.5, TUBE		-------	-------	4	95002-41050-08	0622357
24	CLIP C11, TUBE		-------	-------	1	95002-70000	0053595
25	BOLT, FLANGE, 6X12		-------	-------	2	95700-06012-00	0487025
	BOLT, FLANGE, 6X12		-------	-------	2	95701-06012-00	2105799
26	BOLT, FLANGE, 6X40		-------	-------	2	95700-06040-08	0252320
	BOLT, FLANGE, 6X40		-------	-------	2	95701-06040-C8	2105872

CONTENTS

TITLE	GRID
AIR CLEANER	1-E7
ALTERNATOR	1-B8
BATTERY	1-E5
BRAKE CALIPER, FR	1-D10
BRAKE CALIPER, RR	1-E1
BRAKE MASTER CYL., FR	1-D4
BRAKE MASTER CYL., RR	1-D12
CAM CHAIN	1-B5
CAMSHAFT	1-B4
CANISTER (AC)	1-F11
CARBURETOR (ASSY.)	1-C7
CARBURETOR COMPONENTS	1-C8
CHAIN CASE	1-E11
CLUTCH	1-D3
CLUTCH	1-B6
CLUTCH MASTER CYLINDER	1-D5
CONTROL SWITCHES	1-D3
COWL	1-F8
COWL, RR	1-E4
CRANKCASE COVER, L	1-B9
CRANKCASE COVER, R	1-B6
CRANKSHAFT	1-C2
CYLINDER BLOCK	1-B12
CYLINDER HEAD COVER	1-B1
CYLINDER HEAD, FR	1-B1
CYLINDER HEAD, RR	1-B3
FENDER, FR	1-D7
FENDER, RR	1-F1
FRAME BODY	1-F6
FUEL PUMP	1-E6
FUEL TANK	1-E3
GASKET KIT A	1-C9
GASKET KIT B	1-C9
GEARSHIFT DRUM	1-C5
HANDLEBAR	1-D6
HEADLIGHT	1-D1
IGNITION COIL	1-F4
INSTRUMENTS	1-D2
MARK	1-F10
MUFFLER, EXHAUST	1-E8
OIL FILTER	1-B11
OIL PAN	1-B11
OIL PUMP	1-B11
PEDAL, BRAKE	1-E9
PEDAL, GEARSHIFT	1-E9
PISTON	1-C2
PULSE GENERATOR	1-B7
RADIATOR	1-F5
SEAT	1-E4
SHOCK ABSORBER, FR	1-D8
SHOCK ABSORBER, RR	1-F12
SIDE COVER	1-E5
SPARK UNIT	1-F1
STAND	1-E10
STARTER CLUTCH	1-B7
STARTER MOTOR	1-B11
STEERING STEM	1-D7
STEP	1-E9
STRIPE	1-F10
SWINGARM	1-E11
TAILLIGHT	1-F3
TENSIONER	1-B5
THERMOSTAT	1-C6
TOOLS	1-F8
TOP BRIDGE	1-D6
TRANSMISSION	1-C4
TURN SIGNAL	1-F2
VALVE	1-B4
WATER PIPE	1-C6
WATER PUMP	1-B9
WHEEL, FR	1-D11
WHEEL, RR	1-E2
WIRE HARNESS	1-F4

GRID NO.

AIR CLEANER

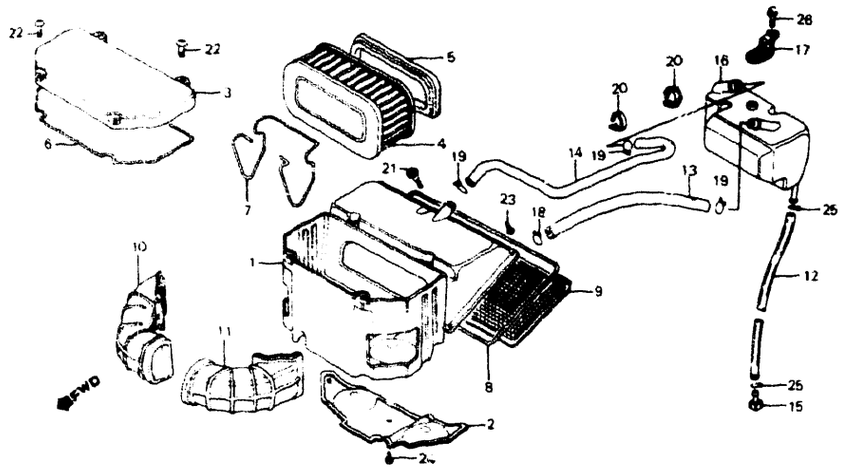

VF1000F '84

G43-BMB6-55

BLOCK NO. F-19

REF NO	DESCRIPTION	AREA CODE	SERIAL NUMBER FROM	SERIAL NUMBER TO	QTY REQ	PART NUMBER	HONDA CODE
1	CASE, AIR CLEANER	A	-------	EM003753	1	17210-MB6-000	1748474
	CASE, AIR CLEANER	A	-------	-------	1	17210-MB6-010	1967546
	CASE, AIR CLEANER	AC	-------	EM000592	1	17210-MB6-740	1784057
	CASE, AIR CLEANER	AC	-------	-------	1	17210-MB6-741	2011567
2	PROTECTOR COMP., HEAT	AC	-------	-------	1	17211-MB6-740	1784065
3	COVER, AIR CLEANER		-------	-------	1	17215-MB6-000	1748482
4	ELEMENT, AIR CLEANER		-------	-------	1	17216-MB6-000	1748490
5	PACKING, ELEMENT		-------	-------	1	17218-MB6-000	1748508
6	SEAL, AIR CLEANER COVER		-------	-------	1	17219-KB7-000	1227495
7	SPRING, ELEMENT SETTING		-------	-------	1	17219-MB6-000	1748516
8	PACKING, AIR CLEANER BASE		-------	-------	1	17232-MB2-000	1427517
9	NET COMP., AIR CLEANER BASE		-------	-------	1	17251-MB2-000	1401561
10	DUCT, R. AIR CLEANER IN	A	-------	EM003753	1	17254-MB6-000	1748532
		AC	-------	EM000592	1	17254-MB6-000	1748532
	DUCT, R. AIR CLEANER IN		-------	-------	1	17254-MB6-010	2032696
11	DUCT, L. AIR CLEANER IN	A	-------	EM003753	1	17255-MB6-000	1748540
		AC	-------	EM000592	1	17255-MB6-000	1748540
	DUCT, L. AIR CLEANER IN		-------	-------	1	17255-MB6-010	2032704
12	TUBE, BREATHER DRAIN		-------	-------	1	17356-MB2-000	1438753
13	TUBE, BREATHER		-------	-------	1	17357-MB6-000	1748573

SC150* FRAME NO. EM000017 TO EM003753
SC151* FRAME NO. EM000003 TO EM000627

VF1000F '84

BLOCK NO. F-19

REF NO	DESCRIPTION	AREA CODE	SERIAL NUMBER FROM	SERIAL NUMBER TO	QTY REQ	PART NUMBER	HONDA CODE
14	TUBE, AIR CLEANER BREATHER		-------	-------	1	17358-MB6-000	1748581
15	PLUG, BREATHER TUBE		-------	-------	1	17370-419-700	0669002
16	TANK, CATCH AND STORAGE		-------	-------	1	17551-MB6-000	1748623
17	STAY, CATCH TANK		-------	-------	1	17552-MB6-000	1759943
18	CLIP, BREATHER TUBE		-------	-------	1	17554-MB4-000	1384593
19	CLIP, BREATHER TUBE		-------	-------	3	17554-MB6-000	1748631
20	BAND, WIRE		-------	-------	2	32161-367-690	0769224
21	SCREW, PAN, 4X15		-------	-------	5	90141-MB0-000	1251024
22	SCREW, PAN, 5X16.5		-------	-------	4	90142-MB0-000	1251040
23	SCREW, TAPPING, 5X10		-------	-------	2	93901-35100	1762269
24	SCREW, TAPPING, 4X10	AC	-------	-------	3	93903-24220	1478114
25	CLIP D10.5, TUBE		-------	-------	2	95002-41050-08	0622357
26	BOLT, FLANGE, 6X10		-------	-------	1	95700-06010-08	0344952
	BOLT, FLANGE, 6X10		-------	-------	1	95701-06010-08	2204709

CONTENTS

TITLE	GRID
AIR CLEANER	1-E7
ALTERNATOR	1-B8
BATTERY	1-E5
BRAKE CALIPER, FR	1-D10
BRAKE CALIPER, RR	1-E1
BRAKE MASTER CYL., FR	1-D4
BRAKE MASTER CYL., RR	1-D12
CAM CHAIN	1-B5
CAMSHAFT	1-B4
CANISTER (AC)	1-F11
CARBURETOR (ASSY.)	1-C7
CARBURETOR COMPONENTS	1-C8
CHAIN CASE	1-E11
CLUTCH	1-D3
CLUTCH	1-B6
CLUTCH MASTER CYLINDER	1-D5
CONTROL SWITCHES	1-D3
COWL	1-F8
COWL, RR	1-E4
CRANKCASE COVER, L	1-B9
CRANKCASE COVER, R	1-B6
CRANKSHAFT	1-C2
CYLINDER BLOCK	1-B12
CYLINDER HEAD COVER	1-B1
CYLINDER HEAD, FR	1-B1
CYLINDER HEAD, RR	1-B3
FENDER, FR	1-D7
FENDER, RR	1-F1
FRAME BODY	1-F6
FUEL PUMP	1-E6
FUEL TANK	1-E3
GASKET KIT A	1-C9
GASKET KIT B	1-C9
GEARSHIFT DRUM	1-C5
HANDLEBAR	1-D6
HEADLIGHT	1-D1
IGNITION COIL	1-F4
INSTRUMENTS	1-D2
MARK	1-F10
MUFFLER, EXHAUST	1-E6
OIL FILTER	1-B11
OIL PAN	1-B11
OIL PUMP	1-B11
PEDAL, BRAKE	1-E9
PEDAL, GEARSHIFT	1-E9
PISTON	1-C2
PULSE GENERATOR	1-B7
RADIATOR	1-F5
SEAT	1-E4
SHOCK ABSORBER, FR	1-D8
SHOCK ABSORBER, RR	1-E12
SIDE COVER	1-E5
SPARK UNIT	1-F1
STAND	1-E10
STARTER CLUTCH	1-B7
STARTER MOTOR	1-B11
STEERING STEM	1-D7
STEP	1-E9
STRIPE	1-F10
SWINGARM	1-E11
TAILLIGHT	1-F3
TENSIONER	1-B5
THERMOSTAT	1-C6
TOOLS	1-F8
TOP BRIDGE	1-D6
TRANSMISSION	1-C4
TURN SIGNAL	1-F2
VALVE	1-B4
WATER PIPE	1-C6
WATER PUMP	1-B9
WHEEL, FR	1-D11
WHEEL, RR	1-E2
WIRE HARNESS	1-F4

GRID NO.

1-E 7

EXHAUST MUFFLER

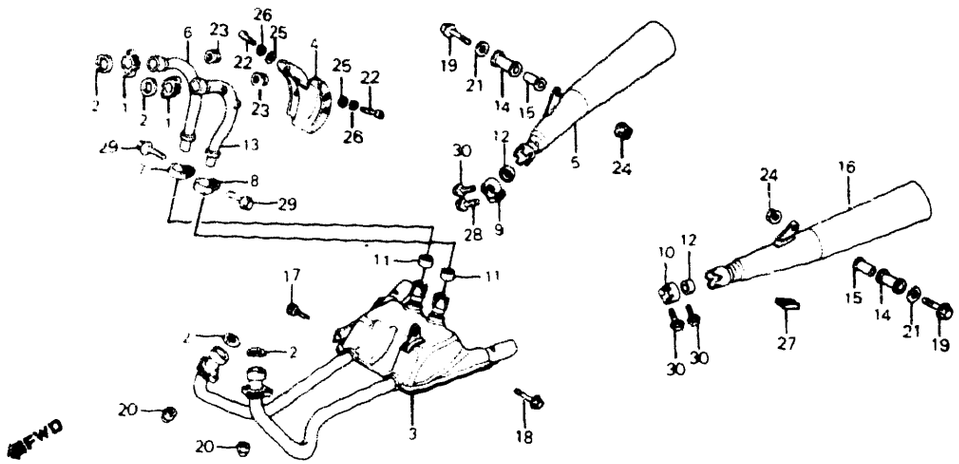

VF1000F 84

G43-BMB6 39

BLOCK NO. F-20

REF NO	DESCRIPTION	AREA CODE	SERIAL NUMBER FROM	SERIAL NUMBER TO	QTY REQ	PART NUMBER	HONDA CODE
1	JOINT, EX PIPE		-------	-------	2	18231-MB4-000	1386648
2	GASKET, EX PIPE		-------	-------	4	18291-MN4-920	2916997
	GASKET, EX PIPE		-------	-------	4	18291-236-000	0148593
3	CHAMBER COMP, EX		-------	-------	1	18300-MB6-003	1757541
	CHAMBER COMP, EX		-------	-------	1	18300-MB6-630	3634888
4	PROTECTOR, RR EX PIPE		-------	-------	1	18316-MB6-003	1757558
5	MUFFLER COMP, R		-------	-------	1	18330-MB6-003	1759984
6	PIPE, R RR EX		-------	-------	1	18370-MB6-003	1757566
7	BAND, R EX PIPE		-------	-------	1	18373-MB6-003	1741974
8	BAND, L EX PIPE		-------	-------	1	18374-MB6-003	1741982
9	BAND, R MUFFLER		-------	-------	1	18376-MB2-003	1435510
10	BAND, L MUFFLER		-------	-------	1	18377-MB2-003	1435528
11	GASKET, MUFFLER		-------	-------	2	18391-MJ4-000	2051027
	GASKET, MUFFLER		-------	-------	2	18391-425-000	0717777
12	GASKET, MUFFLER		-------	-------	2	18392-449-000	0790329
13	PIPE, L RR EX		-------	-------	1	18420-MB6-003	1757574
14	RUBBER, MUFFLER MOUNTING		-------	-------	2	18421-438-000	0764688
15	COLLAR, MUFFLER MOUNTING		-------	-------	2	18422-438-000	0764696
16	MUFFLER COMP, L		-------	-------	1	18430-MB6-003	1757582
17	BOLT, FLANGE 8X20		-------	-------	1	90103-MB6-000	1789429

SC150* FRAME NO. EM000017 TO EM003753
SC151* FRAME NO. EM000003 TO EM000627

VF1000F 84

BLOCK NO. F-20

REF NO	DESCRIPTION	AREA CODE	SERIAL NUMBER FROM	SERIAL NUMBER TO	QTY REQ	PART NUMBER	HONDA CODE
18	BOLT, FLANGE, 8X28		-------	-------	1	90104-MB6-000	1789437
19	BOLT, SPECIAL FLANGE, 10X50		-------	-------	2	90176-422-000	0695221
20	NUT, CAP, 6MM		-------	-------	4	90304-438-000	0765693
21	WASHER, SPECIAL, 10MM		-------	-------	2	90557-438-000	0765719
22	SCREW, PAN, 6X8		-------	-------	4	93500-06008-4J	1391010
23	NUT, FLANGE, 6MM		-------	-------	4	94050-06000	0471623
24	NUT, FLANGE, 10MM		-------	-------	2	94050-10000	0483867
25	WASHER, PLAIN, 6MM		-------	-------	4	94101-06800	0345900
26	WASHER, SPRING, 6MM		-------	-------	4	94111-06000	0058974
27	RUBBER A, STAND STOPPER		-------	-------	1	95011-61000	0255638
28	BOLT, FLANGE, 8X32		-------	-------	1	95700-08032-07	1224062
	BOLT, FLANGE, 8X32		-------	-------	1	95701-08032-07	2759371
29	BOLT, FLANGE, 8X35		-------	-------	2	95700-08035-00	0496489
	BOLT, FLANGE, 8X35		-------	-------	2	95701-08035-00	2724029
30	BOLT, FLANGE, 8X35		-------	-------	3	95700-08035-07	0709899

CONTENTS

TITLE	GRID
AIR CLEANER	1-E7
ALTERNATOR	1-B8
BATTERY	1-E5
BRAKE CALIPER, FR	1-D10
BRAKE CALIPER, RR	1-E1
BRAKE MASTER CYL, FR	1-D4
BRAKE MASTER CYL, RR	1-D12
CAM CHAIN	1-B5
CAMSHAFT	1-B4
CANISTER (AC)	1-F11
CARBURETOR (ASSY.)	1-C7
CARBURETOR COMPONENTS	1-C8
CHAIN CASE	1-E11
CLUTCH	1-D3
CLUTCH	1-B6
CLUTCH MASTER CYLINDER	1-D5
CONTROL SWITCHES	1-D3
COWL	1-F8
COWL, RR	1-E4
CRANKCASE COVER, L	1-B9
CRANKCASE COVER, R	1-B6
CRANKSHAFT	1-C2
CYLINDER BLOCK	1-B12
CYLINDER HEAD COVER	1-B1
CYLINDER HEAD, FR	1-B1
CYLINDER HEAD, RR	1-B3
FENDER, FR	1-D7
FENDER, RR	1-F1
FRAME BODY	1-F6
FUEL PUMP	1-E6
FUEL TANK	1-E3
GASKET KIT A	1-C9
GASKET KIT B	1-C9
GEARSHIFT DRUM	1-C5
HANDLEBAR	1-D6
HEADLIGHT	1-D1
IGNITION COIL	1-F4
INSTRUMENTS	1-D2
MARK	1-F10
MUFFLER, EXHAUST	1-E8
OIL FILTER	1-B11
OIL PAN	1-B11
OIL PUMP	1-B11
PEDAL, BRAKE	1-E9
PEDAL, GEARSHIFT	1-E9
PISTON	1-C2
PULSE GENERATOR	1-B7
RADIATOR	1-F5
SEAT	1-E4
SHOCK ABSORBER, FR	1-D8
SHOCK ABSORBER, RR	1-E12
SIDE COVER	1-E5
SPARK UNIT	1-F1
STAND	1-E10
STARTER CLUTCH	1-B7
STARTER MOTOR	1-B11
STEERING STEM	1-D7
STEP	1-E9
STRIPE	1-F10
SWINGARM	1-E11
TAILLIGHT	1-F3
TENSIONER	1-B5
THERMOSTAT	1-C6
TOOLS	1-F8
TOP BRIDGE	1-D6
TRANSMISSION	1-C4
TURN SIGNAL	1-F2
VALVE	1-B4
WATER PIPE	1-C6
WATER PUMP	1-B9
WHEEL, FR	1-D11
WHEEL, RR	1-E2
WIRE HARNESS	1-F4

GRID NO.

BRAKE PEDAL • GEARSHIFT PEDAL

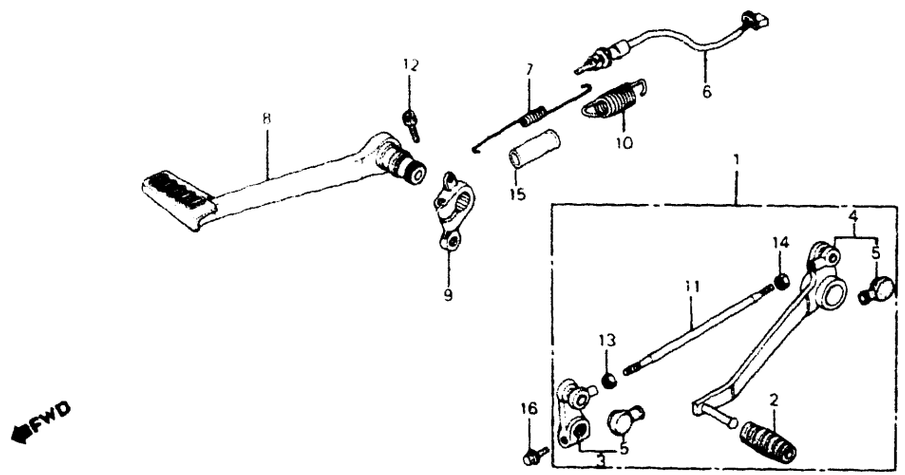

VF1000F '84

G43-8MB6 56

BLOCK NO. F-21

REF NO	DESCRIPTION	AREA CODE	SERIAL NUMBER FROM	SERIAL NUMBER TO	QTY REQ	PART NUMBER	HONDA CODE
1	PEDAL ASSY., GEARSHIFT		-------	-------	1	24700-MB6-000	1749159
2	RUBBER, GEARSHIFT		-------	-------	1	24705-KE8-000	1435536
3	ARM COMP., GEARSHIFT PEDAL		-------	-------	1	24710-MB2-000	1428523
4	PEDAL COMP., GEARSHIFT		-------	-------	1	24720-MB6-000	1749167
5	COVER, DUST		-------	-------	2	24724-422-000	0694869
6	SWITCH ASSY., RR. STOP		-------	-------	1	35350-MB2-000	1434786
7	SPRING, STOP SWITCH		-------	-------	1	35357-KE5-000	1761931
8	PEDAL COMP., RR. BRAKE		-------	-------	1	46500-MB6-000	1754308
9	ARM, RR. BRAKE MIDDLE		-------	-------	1	46502-MB2-000	1430131
10	SPRING, BRAKE PEDAL		-------	-------	1	46514-MB2-000	1430156
11	BOLT, TIE ROD		-------	-------	1	90065-MB6-000	1776624
12	BOLT, SOCKET, 8MM		-------	-------	1	90116-125-782	0857128
13	NUT, GOVERNOR ARM FIXING		-------	-------	1	90201-700-000	0401398
14	NUT, HEX., 6MM		-------	-------	1	94002-06020-0S	1237387
15	TUBE, VINYL, 14X18X20		-------	-------	1	95003-45002-10	1762293
16	BOLT, FLANGE, 6X20		-------	-------	1	95700-06020-00	0488684
	BOLT, FLANGE, 6X20		-------	-------	1	95701-06020-00	2105815

SC150* FRAME NO. EM000017 TO EM003753
SC151* FRAME NO. EM000003 TO EM000627

STEP

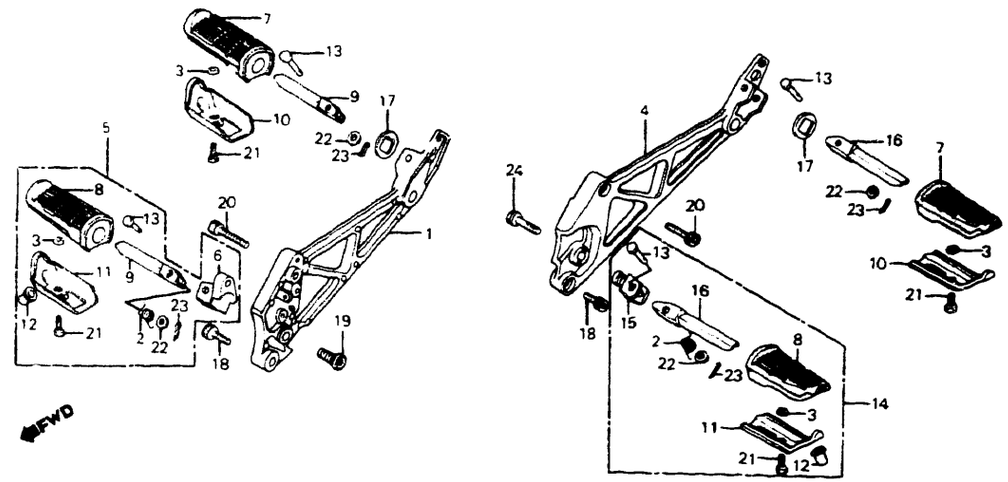

VF1000F '84

G43-8MB6-40

BLOCK NO. F-22

REF NO	DESCRIPTION	AREA CODE	SERIAL NUMBER FROM	SERIAL NUMBER TO	QTY REQ	PART NUMBER	HONDA CODE
1	HOLDER, R. STEP		-------	-------	1	50610-MB6-000	1749852
	HOLDER, R. STEP		-------	-------	1	50610-MB6-010	1883941
2	SPRING, STEP RETURN		-------	-------	2	50617-MB2-000	1401645
3	COLLAR, 6.5X11X3		-------	-------	4	50618-KE8-000	1435544
4	HOLDER, L. STEP		-------	-------	1	50620-MB6-000	1754456
	HOLDER, L. STEP		-------	-------	1	50620-MB6-010	2223659
5	BAR ASSY., R. MAIN STEP		-------	-------	1	50630-MB6-000	1749860
6	BRACKET, R. STEP		-------	-------	1	50631-MB6-000	1749878
7	RUBBER, STEP		-------	-------	2	50632-MB2-000	1430354
8	RUBBER, STEP		-------	-------	2	50632-MJ0-000	1762061
9	BAR COMP., R. STEP		-------	-------	2	50635-MB2-000	1430362
10	PLATE B, STEP		-------	-------	2	50636-MB2-000	1430370
11	PLATE B, STEP		-------	-------	2	50636-MB6-000	1749886
12	PIN, STEP PLATE		-------	-------	2	50637-MB6-000	1749894
13	PIN, STEP BAR JOINT		-------	-------	4	50639-MB2-000	1430388
14	BAR ASSY., L. MAIN STEP		-------	-------	1	50640-MB6-000	1749902
15	BRACKET, L. STEP		-------	-------	1	50641-MB6-000	1749910
16	BAR COMP., L. STEP		-------	-------	2	50645-MB2-000	1430412
17	WASHER, PILLION STEP		-------	-------	2	50712-MB2-000	1401652
18	BOLT, SOCKET, 10X20		-------	-------	2	90109-MB2-000	1401686

CONTENTS

TITLE	GRID
AIR CLEANER	1-E7
ALTERNATOR	1-B8
BATTERY	1-E5
BRAKE CALIPER, FR.	1-D10
BRAKE CALIPER, RR.	1-E1
BRAKE MASTER CYL., FR.	1-D4
BRAKE MASTER CYL., RR.	1-D12
CAM CHAIN	1-B5
CAMSHAFT	1-B4
CANISTER (AC)	1-F11
CARBURETOR (ASSY.)	1-C7
CARBURETOR COMPONENTS	1-C8
CHAIN CASE	1-E11
CLUTCH	1-D3
CLUTCH	1-B6
CLUTCH MASTER CYLINDER	1-D5
CONTROL SWITCHES	1-D3
COWL	1-F8
COWL, RR.	1-E4
CRANKCASE COVER, L.	1-B9
CRANKCASE COVER, R.	1-B6
CRANKSHAFT	1-C2
CYLINDER BLOCK	1-B12
CYLINDER HEAD COVER	1-B1
CYLINDER HEAD, FR.	1-B1
CYLINDER HEAD, RR.	1-B3
FENDER, FR.	1-D7
FENDER, RR.	1-F1
FRAME BODY	1-F6
FUEL PUMP	1-E6
FUEL TANK	1-E3
GASKET KIT A	1-C9
GASKET KIT B	1-C9
GEARSHIFT DRUM	1-C5
HANDLEBAR	1-D6
HEADLIGHT	1-D1
IGNITION COIL	1-F4
INSTRUMENTS	1-D2
MARK	1-F10
MUFFLER, EXHAUST	1-E8
OIL FILTER	1-B11
OIL PAN	1-B11
OIL PUMP	1-B11
PEDAL, BRAKE	1-E9
PEDAL, GEARSHIFT	1-E9
PISTON	1-C2
PULSE GENERATOR	1-B7
RADIATOR	1-F5
SEAT	1-E4
SHOCK ABSORBER, FR.	1-D8
SHOCK ABSORBER, RR.	1-E12
SIDE COVER	1-E5
SPARK UNIT	1-F1
STAND	1-E10
STARTER CLUTCH	1-B7
STARTER MOTOR	1-B1*
STEERING STEM	1-D7
STEP	1-E9
STRIPE	1-F10
SWINGARM	1-E11
TAILLIGHT	1-F3
TENSIONER	1-B5
THERMOSTAT	1-C6
TOOLS	1-F8
TOP BRIDGE	1-D6
TRANSMISSION	1-C4
TURN SIGNAL	1-F2
VALVE	1-B4
WATER PIPE	1-C6
WATER PUMP	1-B9
WHEEL, FR.	1-D11
WHEEL, RR.	1-E2
WIRE HARNESS	1-F4

GRID NO.

STEP

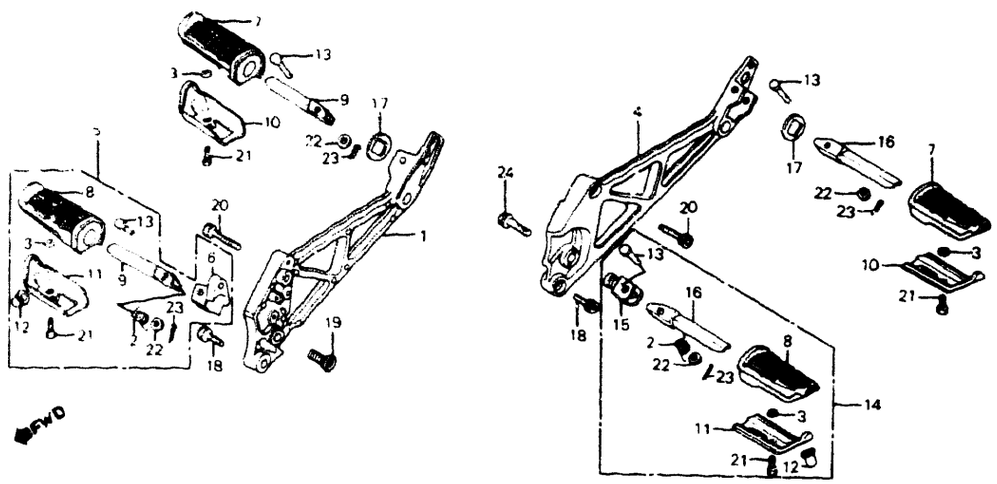

VF1000F '84

G43-BMB6-40

BLOCK NO. F-22

REF NO	DESCRIPTION	AREA CODE	SERIAL NUMBER FROM	SERIAL NUMBER TO	QTY REQ	PART NUMBER	HONDA CODE
19	BOLT, SPECIAL, 10X22		-------	-------	1	90109-MB6-000	1762152
20	BOLT, SOCKET, 10X30		-------	-------	2	90152-MB2-000	1435551
21	BOLT, HEX, 6X12		-------	-------	4	92000-06012	0054197
	BOLT, HEX, 6X12		-------	-------	4	92000-06012-0A	0156448
	BOLT, HEX, 6X12		-------	-------	4	92100-06012	0199588
	BOLT, HEX, 6X12		-------	-------	4	92101-06012	2738821
22	WASHER, PLAIN, 8MM		-------	-------	4	94102-08000	0199596
23	PIN, SPLIT, 1.6X15		-------	-------	4	94201-16150	0058313
	PIN, SPLIT, 1.6X25		-------	-------	4	94201-16250	0058339
24	BOLT, FLANGE, 10X32		-------	-------	1	95700-10032-00	0496703

SC150* FRAME NO. EM000017 TO EM003753
SC151* FRAME NO. EM000003 TO EM000627

STAND

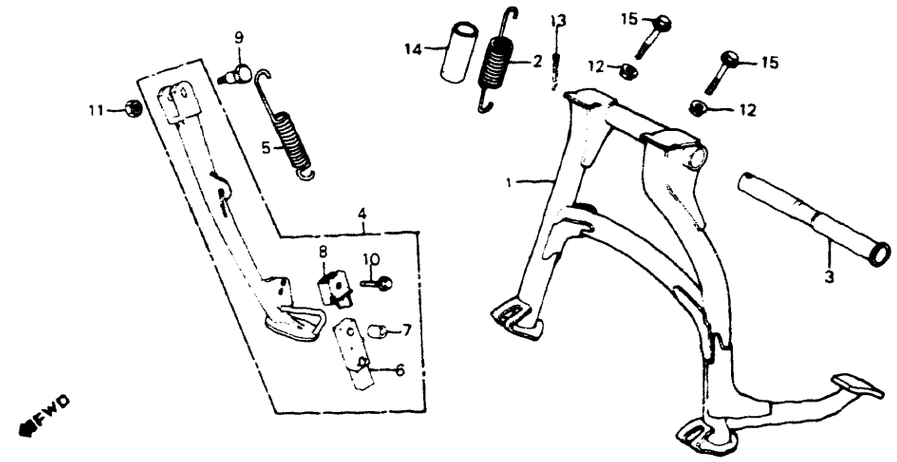

VF1000F '84

G43-BMB6-57

BLOCK NO. F-23

REF NO	DESCRIPTION	AREA CODE	SERIAL NUMBER FROM	SERIAL NUMBER TO	QTY REQ	PART NUMBER	HONDA CODE
1	STAND COMP., MAIN		-------	-------	1	50500-MB6-000	1749837
2	SPRING, MAIN STAND		-------	-------	1	50522-MB2-000	1430297
3	PIPE, MAIN STAND PIVOT		-------	-------	1	50526-MB6-000	1760644
4	BAR ASSY., SIDE STAND		-------	-------	1	50540-MB6-000	1749845
5	SPRING, SIDE STAND		-------	-------	1	50541-MB0-000	1248822
6	RUBBER, STAND		-------	-------	1	50548-356-700	0382648
7	COLLAR, STAND RUBBER MOUNTING		-------	-------	1	50549-356-700	0382655
8	BRACKET, SIDE STAND RUBBER		-------	-------	1	50574-ME5-610	1762046
9	BOLT, SIDE STAND PIVOT		-------	-------	1	90108-MB0-000	1250943
10	BOLT, SIDE STAND RUBBER MOUNT		-------	-------	1	90115-MB0-000	1794056
11	NUT, SIDE STAND		-------	-------	1	90203-MJ4-000	1806918
12	NUT, FLANGE, 6MM		-------	-------	2	94050-06080	0612689
13	PIN, SPLIT, 2.5X25		-------	-------	1	94201-25250	0145581
	PIN, SPLIT, 2.5X30		-------	-------	1	94201-25300	0156091
14	TUBE, VINYL, 17.5X20.5X70		-------	-------	1	95003-55007-10	1425313
15	BOLT, FLANGE, 6X40		-------	-------	2	95700-06040-08	0252320
	BOLT, FLANGE, 6X40		-------	-------	2	95701-06040-08	2105872

CONTENTS

TITLE	GRID
AIR CLEANER	1-E7
ALTERNATOR	1-B8
BATTERY	1-E5
BRAKE CALIPER, FR	1-D10
BRAKE CALIPER, RR	1-E1
BRAKE MASTER CYL. FR	1-D4
BRAKE MASTER CYL. RR	1-D12
CAM CHAIN	1-B5
CAMSHAFT	1-B4
CANISTER (AC)	1-F11
CARBURETOR (ASSY.)	1-C7
CARBURETOR COMPONENTS	1-C8
CHAIN CASE	1-E11
CLUTCH	1-D3
CLUTCH	1-B6
CLUTCH MASTER CYLINDER	1-D5
CONTROL SWITCHES	1-D3
COWL	1-F8
COWL, RR	1-E4
CRANKCASE COVER, L	1-B9
CRANKCASE COVER, R	1-B6
CRANKSHAFT	1-C2
CYLINDER BLOCK	1-B12
CYLINDER HEAD COVER	1-B1
CYLINDER HEAD, FR	1-B1
CYLINDER HEAD, RR	1-B3
FENDER, FR	1-D7
FENDER, RR	1-F1
FRAME BODY	1-F6
FUEL PUMP	1-E6
FUEL TANK	1-E3
GASKET KIT A	1-C9
GASKET KIT B	1-C9
GEARSHIFT DRUM	1-C5
HANDLEBAR	1-D6
HEADLIGHT	1-D1
IGNITION COIL	1-F4
INSTRUMENTS	1-D2
MARK	1-F10
MUFFLER, EXHAUST	1-E8
OIL FILTER	1-B11
OIL PAN	1-B11
OIL PUMP	1-B11
PEDAL, BRAKE	1-E9
PEDAL, GEARSHIFT	1-E9
PISTON	1-C2
PULSE GENERATOR	1-B7
RADIATOR	1-F5
SEAT	1-E4
SHOCK ABSORBER, FR	1-D8
SHOCK ABSORBER, RR	1-E12
SIDE COVER	1-E5
SPARK UNIT	1-F1
STAND	1-E10
STARTER CLUTCH	1-B7
STARTER MOTOR	1-B11
STEERING STEM	1-D7
STEP	1-E9
STRIPE	1-F10
SWINGARM	1-E11
TAILLIGHT	1-F3
TENSIONER	1-B5
THERMOSTAT	1-C6
TOOLS	1-F8
TOP BRIDGE	1-D6
TRANSMISSION	1-C4
TURN SIGNAL	1-F2
VALVE	1-B4
WATER PIPE	1-C6
WATER PUMP	1-B9
WHEEL, FR	1-D11
WHEEL, RR	1-E2
WIRE HARNESS	1-F4

GRID NO.

SWINGARM • CHAIN CASE

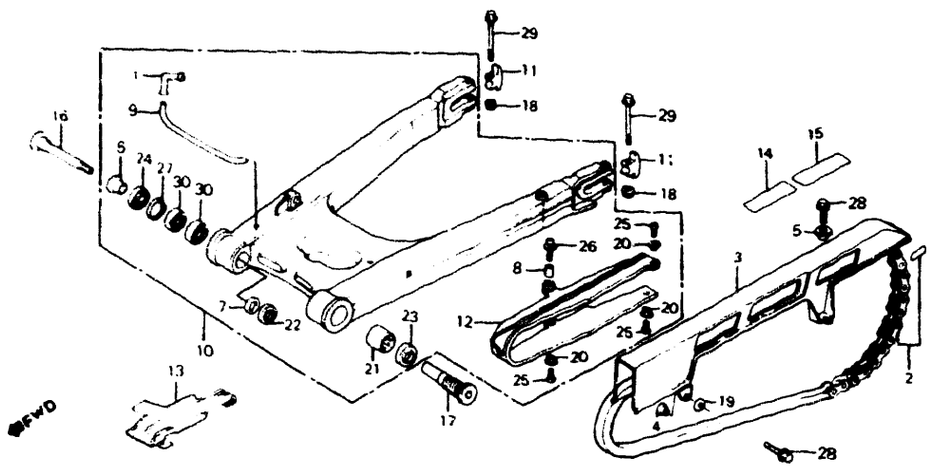

CAUTION OR WARNING LABELS MUST BE ORDERED SEPARATELY WHEN APPLICABLE

VF1000F '84 — G43-BMB6-58 — BLOCK NO. F-24

REF NO	DESCRIPTION	AREA CODE	SERIAL NUMBER FROM	SERIAL NUMBER TO	QTY REQ	PART NUMBER	HONDA CODE
1	JOINT, TUBE		-------	-------	1	19103-463-000	0881904
2	CHAIN SET, DRIVE (50LO-110LE)		-------	-------	1	405A3-MB6-005	1754142
3	CASE, DRIVE CHAIN		-------	-------	1	40510-MB2-020	1761949
4	COLLAR, CHAIN CASE		-------	-------	1	40512-MB2-000	1438795
5	COLLAR, CHAIN CASE		-------	-------	1	40514-310-000	0113332
6	COLLAR, SWINGARM PIVOT		-------	-------	1	52102-MA6-000	1435577
7	COLLAR, SWINGARM PIVOT (B)		-------	-------	1	52102-MB2-000	1430438
8	COLLAR, CHAIN SLIDER		-------	-------	1	52105-MB2-000	1430446
9	HOSE, DRAIN		-------	-------	1	52106-MB2-000	1425032
10	SWINGARM, RR		-------	-------	1	52110-MB2-700	1695436
11	STOPPER, CHAIN ADJUSTER		-------	-------	2	52136-MA2-000	1060151
12	SLIDER, CHAIN		-------	-------	1	52170-MB2-010	1708387
13	SLIDER, CHAIN (B)		-------	-------	1	52171-MB2-000	1425065
14	LABEL, TIRE CAUTION		-------	-------	1	87505-MB6-670	1755248
15	LABEL, DRIVE CHAIN CAUTION		-------	-------	1	87507-MB6-670	1750207
16	BOLT, R SWINGARM PIVOT		-------	-------	1	90121-MB2-000	1431212
17	BOLT, L SWINGARM PIVOT		-------	-------	1	90122-MB2-000	1431220
18	NUT, FLANGE, 8MM		-------	-------	2	90309-KF0-003	1420231
	NUT, FLANGE, 8MM		-------	-------	2	90309-428-731	1001197
9	WASHER, 6MM		-------	-------	1	90485-MB2-000	1438811

SC150* FRAME NO EM000[illegible]7 TO EM003753
SC151* FRAME NO EM000003 TO EM000627

VF1000F '84 — BLOCK NO. F-24

REF NO	DESCRIPTION	AREA CODE	SERIAL NUMBER FROM	SERIAL NUMBER TO	QTY REQ	PART NUMBER	HONDA CODE
20	WASHER, FR. FENDER MOUNT		-------	-------	3	90556-044-000	0132621
21	BEARING, SWINGARM PIVOT		-------	-------	1	91071-MB2-701	1695519
22	OIL-SEAL, 24X34X5.5		-------	-------	1	91203-148-003	0640839
23	DUST SEAL, 22X35X7		-------	-------	1	91213-MB2-003	1431386
	DUST SEAL, 22X35X7		-------	-------	1	91213-MB2-006	1431394
24	DUST SEAL, 24X40X5.5 (ARAI)		-------	-------	1	91214-MA6-003	1435585
	DUST SEAL, 24X40X5.5 (NOK)		-------	-------	1	91214-MA6-006	1435593
25	SCREW, PAN, 5X12		-------	-------	3	93500-05012-0H	056 795
26	SCREW-WASHER, 5X25		-------	-------	1	93894-05025-17	1425305
27	CIRCLIP, INTERNAL, 40MM		-------	-------	1	94520-40000	0567016
28	BOLT, FLANGE, 6X18		-------	-------	2	95700-06018-07	1376144
	BOLT, FLANGE, 6X18		-------	-------	2	95701-06018-07	2410918
29	BOLT, FLANGE, 8X65		-------	-------	2	95900-08065-00	1425362
30	BEARING, RADIAL BALL, 6203		-------	-------	2	96100-62030-10	1435601

CONTENTS

TITLE	GRID
AIR CLEANER	1-E7
ALTERNATOR	1-B8
BATTERY	1-E5
BRAKE CALIPER, FR	1-D10
BRAKE CALIPER, RR	1-E1
BRAKE MASTER CYL. FR	1-D4
BRAKE MASTER CYL. RR	1-D12
CAM CHAIN	1-B5
CAMSHAFT	1-B4
CANISTER (AC)	1-F11
CARBURETOR (ASSY.)	1-C7
CARBURETOR COMPONENTS	1-C8
CHAIN CASE	1-E11
CLUTCH	1-D3
CLUTCH	1-B6
CLUTCH MASTER CYLINDER	1-D5
CONTROL SWITCHES	1-D3
COWL	1-F8
COWL, RR	1-E4
CRANKCASE COVER, L	1-B9
CRANKCASE COVER, R	1-B6
CRANKSHAFT	1-C2
CYLINDER BLOCK	1-B12
CYLINDER HEAD COVER	1-B1
CYLINDER HEAD, FR	1-B1
CYLINDER HEAD, RR	1-B3
FENDER, FR	1-D7
FENDER, RR	1-F1
FRAME BODY	1-F6
FUEL PUMP	1-E6
FUEL TANK	1-E3
GASKET KIT A	1-C9
GASKET KIT B	1-C9
GEARSHIFT DRUM	1-C5
HANDLEBAR	1-D6
HEADLIGHT	1-D1
IGNITION COIL	1-F4
INSTRUMENTS	1-D2
MARK	1-F10
MUFFLER, EXHAUST	1-E8
OIL FILTER	1-B11
OIL PAN	1-B11
OIL PUMP	1-B11
PEDAL, BRAKE	1-E9
PEDAL, GEARSHIFT	1-E9
PISTON	1-C2
PULSE GENERATOR	1-B7
RADIATOR	1-F5
SEAT	1-E4
SHOCK ABSORBER, FR	1-D8
SHOCK ABSORBER, RR	1-E12
SIDE COVER	1-E5
SPARK UNIT	1-F1
STAND	1-E10
STARTER CLUTCH	1-B7
STARTER MOTOR	1-B11
STEERING STEM	1-D7
STEP	1-E9
STRIPE	1-F10
SWINGARM	1-E11
TAILLIGHT	1-F3
TENSIONER	1-B5
THERMOSTAT	1-C6
TOOLS	1-F8
TOP BRIDGE	1-D6
TRANSMISSION	1-C4
TURN SIGNAL	1-F2
VALVE	1-B4
WATER PIPE	1-C6
WATER PUMP	1-B9
WHEEL, FR	1-D11
WHEEL, RR	1-E2
WIRE HARNESS	1-F4

GRID NO.

1-E 11

REAR SHOCK ABSORBER

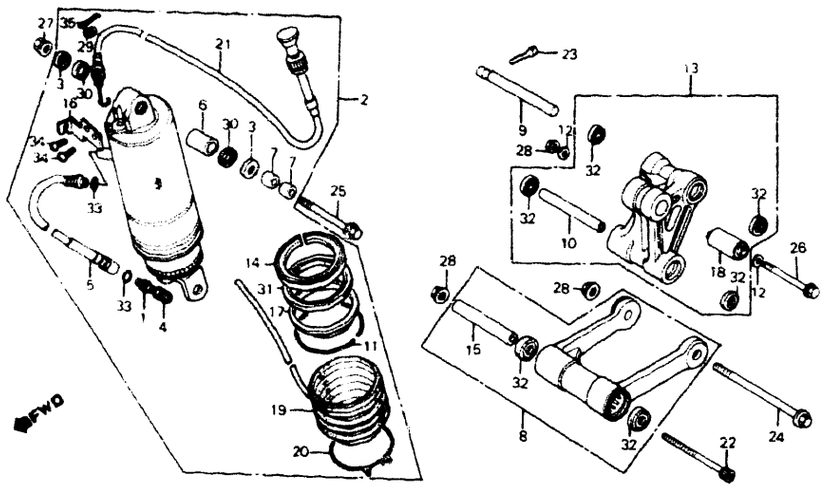

VF1000F 84

G43-BMB6-43

BLOCK NO. F-25

REF NO	DESCRIPTION	AREA CODE	SERIAL NUMBER FROM	TO	QTY REQ	PART NUMBER	HONDA CODE
1	VALVE COMP., AIR (SHOWA)		-------	-------	1	51456-469-013	0950428
2	SHOCK ABSORBER ASSY., RR		-------	-------	1	52400-MB6-003	1749944
3	CAP (SHOWA)		-------	-------	2	52406-MA1-731	1087741
4	CAP, AIR VALVE (SHOWA)		-------	-------	1	52425-169-003	1008853
5	HOSE COMP., RR. SHOCK		-------	-------	1	52432-MB2-701	1701572
6	METAL, BUSH		-------	-------	1	52452-MA1-731	1087766
7	COLLAR, BUSH		-------	-------	2	52453-MB6-003	1801588
8	ROD ASSY., SHOCK CONNECTING		-------	-------	1	52460-MB6-000	1749951
9	SHAFT, SHOCK ARM UPPER		-------	-------	1	52462-MB2-700	1701580
10	COLLAR, CONNECTING ROD LOWER		-------	-------	1	52463-MB6-000	1744333
11	RING B, STOPPER		-------	-------	1	52463-MC7-013	1718337
12	WASHER, THRUST		-------	-------	2	52466-MB2-000	1413236
13	ARM ASSY., SHOCK		-------	-------	1	52470-MB6-000	1749969
14	CASE, GUIDE		-------	-------	1	52472-MC7-003	1209782
15	COLLAR, CONNECTING ROD		-------	-------	1	52475-MJ0-000	1749977
16	HOLDER, ADJUSTING		-------	-------	1	52476-MJ0-003	1744374
17	RING, BACK UP		-------	-------	1	52477-MC7-013	1715345
18	BUSH, DAMPER		-------	-------	1	52485-MA2-003	1055389
19	BOOT COMP., RR. SHOCK		-------	-------	1	52611-MB2-003	1435619
20	BAND, BOOT		-------	-------	1	52612-MA2-003	1063288

SC150* FRAME NO. EM000017 TO EM003753
SC151* FRAME NO. EM000003 TO EM000627

VF1000F 84

BLOCK NO. F-25

REF NO	DESCRIPTION	AREA CODE	SERIAL NUMBER FROM	TO	QTY REQ	PART NUMBER	HONDA CODE
21	CABLE COMP., CONTROL		-------	-------	1	52650-MB6-003	1754647
22	BOLT, SOCKET, 10X115		-------	-------	1	90105-MB6-000	1750264
23	BOLT, SOCKET		-------	-------	1	90116-391-670	0420471
24	BOLT, UBS, 10X100		-------	-------	1	90153-MA1-000	1057256
25	BOLT, FLANGE, 10X66		-------	-------	1	90182-MB2-003	1413244
26	BOLT D, FLANGE		-------	-------	1	90189-MA2-003	1089473
27	NUT, AXLE, 10MM		-------	-------	1	90304-GA6-003	1023969
28	NUT, U, 10MM		-------	-------	3	90304-GE8-003	1439249
29	WASHER, PLAIN		-------	-------	1	90550-MJ0-003	1745363
30	DUST SEAL (SHOWA)		-------	-------	2	91254-MA1-731	1089572
31	OIL SEAL, 65X80X10.5		-------	-------	1	91257-MC7-003	1218536
32	DUST SEAL, CONNECTING ROD PIVOT		-------	-------	6	91262-MB2-005	1425289
33	O-RING, 5.8X1.9		-------	-------	2	91301-469-003	0874763
	O-RING, 5.8X1.9		-------	-------	2	91305-323-000	0258012
	O-RING, 5.6X1.9		-------	-------	2	91318-ME5-003	1366574
34	SCREW, PAN, 4X8		-------	-------	2	93500-04008-1G	1062397
35	PIN, SPLIT, 1.6		-------	-------	1	94201-16080	1038393

CONTENTS

TITLE	GRID
AIR CLEANER	1-E7
ALTERNATOR	1-B8
BATTERY	1-E5
BRAKE CALIPER, FR	1-D10
BRAKE CALIPER, RR	1-E1
BRAKE MASTER CYL., FR	1-D4
BRAKE MASTER CYL., RR	1-D12
CAM CHAIN	1-B5
CAMSHAFT	1-B4
CANISTER (AC)	1-F11
CARBURETOR (ASSY.)	1-C7
CARBURETOR COMPONENTS	1-C6
CHAIN CASE	1-E11
CLUTCH	1-D3
CLUTCH	1-B6
CLUTCH MASTER CYLINDER	1-D5
CONTROL SWITCHES	1-D3
COWL	1-F8
COWL, RR	1-E4
CRANKCASE COVER, L	1-B9
CRANKCASE COVER, R	1-B6
CRANKSHAFT	1-C2
CYLINDER BLOCK	1-B12
CYLINDER HEAD COVER	1-B1
CYLINDER HEAD, FR	1-B1
CYLINDER HEAD, RR.	1-B3
FENDER, FR	1-D7
FENDER, RR	1-F1
FRAME BODY	1-F6
FUEL PUMP	[illegible]
FUEL TANK	[illegible]
GASKET KIT A	1-C9
GASKET KIT B	1-C9
GEARSHIFT DRUM	1-C5
HANDLEBAR	1-D6
HEADLIGHT	1-D1
IGNITION COIL	1-F4
INSTRUMENTS	1-D2
MARK	1-F10
MUFFLER, EXHAUST	1-E8
OIL FILTER	1-B11
OIL PAN	1-B11
OIL PUMP	1-B11
PEDAL, BRAKE	1-E9
PEDAL, GEARSHIFT	1-E9
PISTON	1-C2
PULSE GENERATOR	1-B7
RADIATOR	1-F5
SEAT	1-E4
SHOCK ABSORBER, FR	1-D6
SHOCK ABSORBER, RR	1-E12
SIDE COVER	1-E5
SPARK UNIT	1-F1
STAND	1-E10
STARTER CLUTCH	1-B7
STARTER MOTOR	1-B11
STEERING STEM	1-D7
STEP	1-E9
STRIPE	1-F10
SWINGARM	1-E11
TAILLIGHT	1-F3
TENSIONER	1-B5
THERMOSTAT	1-C6
TOOLS	1-F8
TOP BRIDGE	1-D6
TRANSMISSION	1-C4
TURN SIGNAL	1-F2
VALVE	[illegible] 34
WATER PIPE	-C6
WATER PUMP	1-B9
WHEEL, FR.	1-D11
WHEEL, RR.	1-E2
WIRE HARNESS	1-F4

GRID NO.

1-E 12

REAR FENDER • SPARK UNIT

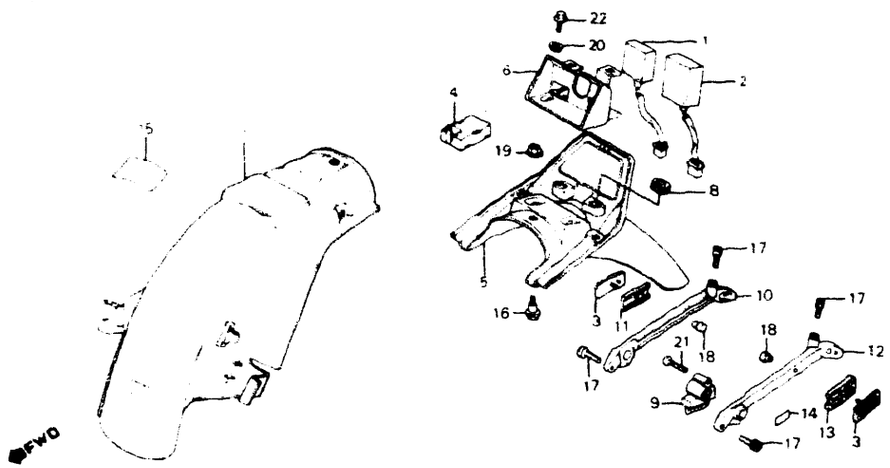

CAUTION OR WARNING LABELS MUST BE ORDERED SEPARATELY WHEN APPLICABLE

VF1000F 84 — G43 BMB6 59 — BLOCK NO F-26

REF NO	DESCRIPTION	AREA CODE	SERIAL NUMBER FROM	SERIAL NUMBER TO	QTY REQ	PART NUMBER	HONDA CODE
1	SPARK UNIT		-------	-------	1	30400-MB4-005	1385301
	SPARK UNIT		-------	-------	1	30400-MB6-004	1760271
2	SPARK UNIT		-------	-------	1	30410-MB6-004	1749217
	SPARK UNIT		-------	-------	1	30410-MB6-005	1749225
3	REFLECTOR REFLEX		-------	-------	2	33741-MC7-611	1216944
	REFLECTOR REFLEX		-------	-------	2	33741-MC7-612	1853811
4	SENSOR STOP & TAILLIGHT		-------	-------	1	35550-MB2-771	1718311
	SENSOR STOP & TAILLIGHT		-------	-------	1	35550-MB2-772	1693522
5	FENDER A RR		-------	-------	1	80100-MB2-010	1762111
6	PLATE TOOL SETTING		-------	-------	1	80102-MB2-000	1430826
7	FENDER B RR		-------	-------	1	80105-MB2-010	1762129
8	GROMMET AIR CLEANER CASE		-------	-------	2	83551-GE2-000	1406164
9	HOLDER ASSY HELMET		-------	-------	1	84102-ME1-671	1212729
10	GRIP R SIDE		-------	-------	1	84110-MB2-670	1430891
11	BASE R REFLECTOR		-------	-------	1	84111-MB2-670	1435650
12	GRIP L SIDE		-------	-------	1	84120-MB2-670	1430925
13	BASE L REFLECTOR		-------	-------	1	84121-MB2-670	1435668
14	LABEL HELMET HOLDER		-------	-------	1	87511-323-670	0274811
15	LABEL ACCESSORIES & LOADING CAUTION		-------	-------	1	87512-MA4-670	0952184

SC150' FRAME NO EM000017 TO EM003753
SC151' FRAME NO EM000003 TO EM000627

VF1000F 84 — BLOCK NO F-26

REF NO	DESCRIPTION	AREA CODE	SERIAL NUMBER FROM	SERIAL NUMBER TO	QTY REQ	PART NUMBER	HONDA CODE
16	BOLT, SPECIAL, 6MM		-------	-------	1	90109-434-000	0787473
17	BOLT, SOCKET, 8X16		-------	-------	4	90115-463-000	0881151
18	NUT, SPECIAL, 5MM		-------	-------	2	90301-MB2-000	1435676
19	NUT, FLANGE, 6MM		-------	-------	1	90302-187-000	1032093
20	COLLAR, GEARSHIFT LEVER MOUNT		-------	-------	2	90522-170-700	0941138
21	SCREW, PAN, 6X25		-------	-------	2	93500-06025-0H	1435684
22	BOLT, FLANGE, 6X10		-------	-------	2	95700-06010-08	0344952
	BOLT, FLANGE, 6X10		-------	-------	2	95701-06010-08	2204709

CONTENTS

TITLE	GRID
AIR CLEANER	1-E7
ALTERNATOR	1-B8
BATTERY	1-E5
BRAKE CALIPER, FR	1-D10
BRAKE CALIPER, RR	1-E1
BRAKE MASTER CYL, FR	1-D4
BRAKE MASTER CYL, RR	1-D12
CAM CHAIN	1-B5
CAMSHAFT	1-B4
CANISTER (AC)	1-F11
CARBURETOR (ASSY)	1-C7
CARBURETOR COMPONENTS	1-C8
CHAIN CASE	1-E11
CLUTCH	1-D3
CLUTCH	1-B6
CLUTCH MASTER CYLINDER	1-D5
CONTROL SWITCHES	1-D3
COWL	1-F8
COWL, RR	1-E4
CRANKCASE COVER, L	1-B9
CRANKCASE COVER, R	1-B6
CRANKSHAFT	1-C2
CYLINDER BLOCK	1-B12
CYLINDER HEAD COVER	1-B1
CYLINDER HEAD, FR	1-B1
CYLINDER HEAD, RR	1-B3
FENDER, FR	1-D7
FENDER, RR	1-F1
FRAME BODY	1-F6
FUEL PUMP	1-E6
FUEL TANK	1-E3
GASKET KIT A	1-C9
GASKET KIT B	1-C9
GEARSHIFT DRUM	1-C5
HANDLEBAR	1-D6
HEADLIGHT	1-D1
IGNITION COIL	1-F4
INSTRUMENTS	1-D2
MARK	1-F10
MUFFLER, EXHAUST	1-E8
OIL FILTER	1-B11
OIL PAN	1-B11
OIL PUMP	1-B11
PEDAL, BRAKE	1-E9
PEDAL, GEARSHIFT	1-E9
PISTON	1-C2
PULSE GENERATOR	1-B7
RADIATOR	1-F5
SEAT	1-E4
SHOCK ABSORBER, FR	1-D8
SHOCK ABSORBER, RR	1-E12
SIDE COVER	1-E5
SPARK UNIT	1-F1
STAND	1-E10
STARTER CLUTCH	1-B7
STARTER MOTOR	1-B11
STEERING STEM	1-D7
STEP	1-E9
STRIPE	1-F10
SWINGARM	1-E11
TAILLIGHT	1-F3
TENSIONER	1-B5
THERMOSTAT	1-C6
TOOLS	1-F8
TOP BRIDGE	1-D6
TRANSMISSION	1-C4
TURN SIGNAL	1-F2
VALVE	1-B4
WATER PIPE	1-C6
WATER PUMP	1-B9
WHEEL, FR	1-D11
WHEEL, RR	1-E2
WIRE HARNESS	1-F4

GRID NO.

1-F 1

TURN SIGNAL

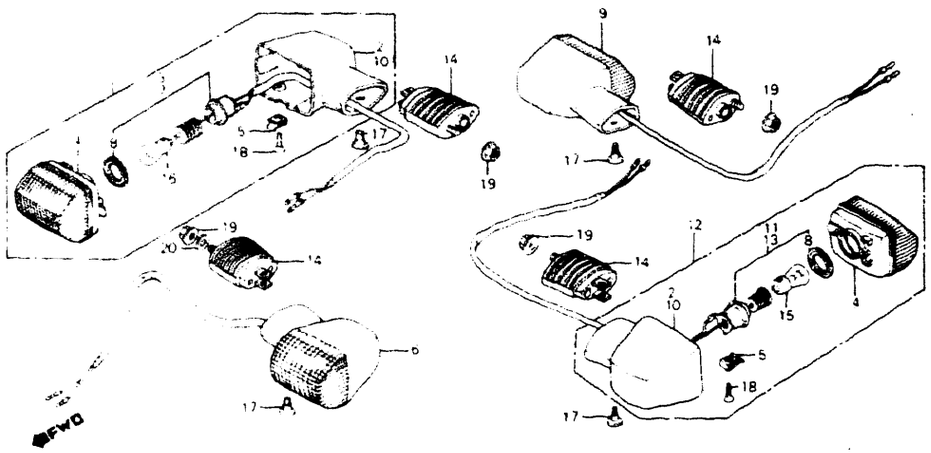

VF1000F 84

G43 BMB6 66

BLOCK NO F-27

REF NO	DESCRIPTION	AREA CODE	SERIAL NUMBER FROM	SERIAL NUMBER TO	QTY REQ	PART NUMBER	HONDA CODE
1	TURN SIGNAL ASSY R FR (12V23 8W)		-------	-------	1	33400-MB6-671	1749407
2	BASE R TURN SIGNAL		-------	-------	2	33401-MB6-003	1742774
3	SOCKET COMP R TURN SIGNAL		-------	-------	1	33405-MB6-670	1749415
4	LENS COMP TURN SIGNAL		-------	-------	4	33406-MB2-671	1414689
5	NUT SPECIAL		-------	-------	4	33407-MB2-003	1435700
6	TURN SIGNAL ASSY L FR (12V23 8W)		-------	-------	1	33450-MB6-671	1749431
7	SOCKET COMP L TURN SIGNAL		-------	-------	1	33455-MB6-670	1749449
8	GASKET SEAL		-------	-------	4	33518-MB2-003	1435726
9	TURN SIGNAL ASSY R RR (12V23 8W)		-------	-------	1	33600-MB6-671	1742790
10	BASE L TURN SIGNAL		-------	-------	2	33601-MB6-003	1742808
11	SOCKET COMP R TURN SIGNAL		-------	-------	1	33605-MB6-003	1760347
12	TURN SIGNAL ASSY L RR (12V23 8W)		-------	-------	1	33650-MB6-671	1749472
13	SOCKET COMP L TURN SIGNAL		-------	-------	1	33655-MB6-003	1760354
14	STAY TURN SIGNAL		-------	-------	4	33691-MB2-003	1428986
15	BULB TURN SIGNAL (12V23W)		-------	-------	2	34905-268-671	0145318
16	BULB TURN SIGNAL (12V23 8W)		-------	-------	2	34905-425-671	0824326

SC150' FRAME NO EM000017 TO EM003753
SC151' FRAME NO EM000003 TO EM000627

VF1000F 84

BLOCK NO. F-27

REF NO	DESCRIPTION	AREA CODE	SERIAL NUMBER FROM	SERIAL NUMBER TO	QTY REQ	PART NUMBER	HONDA CODE
17	SCREW, SPECIAL, 6X8		-------	-------	4	90080-MB2-000	1425271
18	SCREW, OVAL, 4X12		-------	-------	4	93700-04012-1G	1425297
19	NUT, FLANGE, 6MM		-------	-------	4	94050-06080	0612689
20	WASHER, PLAIN, 6MM		-------	-------	1	94103-06000	0450122

CONTENTS

TITLE	GRID
AIR CLEANER	1-E7
ALTERNATOR	1-B8
BATTERY	1-E5
BRAKE CALIPER FR	1-D10
BRAKE CALIPER RR	1-E1
BRAKE MASTER CYL FR	1-D4
BRAKE MASTER CYL RR	1-D12
CAM CHAIN	1-B5
CAMSHAFT	1-B4
CANISTER (AC)	1-F11
CARBURETOR (ASSY)	1-C7
CARBURETOR COMPONENTS	1-C8
CHAIN CASE	1-E11
CLUTCH	1-D3
CLUTCH	1-B6
CLUTCH MASTER CYLINDER	1-D5
CONTROL SWITCHES	1-D3
COWL	1-F8
COWL RR	1-E4
CRANKCASE COVER L	1-B9
CRANKCASE COVER R	1-B6
CRANKSHAFT	1-C2
CYLINDER BLOCK	1-B12
CYLINDER HEAD COVER	1-B1
CYLINDER HEAD FR	1-B1
CYLINDER HEAD RR	1-B3
FENDER FR	1-D7
FENDER RR	1-F1
FRAME BODY	1-F6
FUEL PUMP	1-E6
FUEL TANK	1-E3
GASKET KIT A	1-C9
GASKET KIT B	1-C9
GEARSHIFT DRUM	1-C5
HANDLEBAR	1-D6
HEADLIGHT	1-D1
IGNITION COIL	1-F4
INSTRUMENTS	1-D2
MARK	1-F10
MUFFLER EXHAUST	1-E8
OIL FILTER	1-B11
OIL PAN	1-B11
OIL PUMP	1-B11
PEDAL BRAKE	1-E9
PEDAL GEARSHIFT	1-E9
PISTON	1-C2
PULSE GENERATOR	1-B7
RADIATOR	1-F5
SEAT	1-E4
SHOCK ABSORBER FR	1-D8
SHOCK ABSORBER RR	1-E12
SIDE COVER	1-E5
SPARK UNIT	1-F1
STAND	1-E10
STARTER CLUTCH	1-B7
STARTER MOTOR	1-B11
STEERING STEM	1-D7
STEP	1-E9
STRIPE	1-F10
SWINGARM	1-E11
TAILLIGHT	1-F3
TENSIONER	1-B5
THERMOSTAT	1-C6
TOOLS	1-F8
TOP BRIDGE	1-D6
TRANSMISSION	1-C4
TURN SIGNAL	1-F2
VALVE	1-B4
WATER PIPE	1-C6
WATER PUMP	1-B9
WHEEL FR	1-D11
WHEEL RR	1-E2
WIRE HARNESS	1-F4

GRID NO.

1-F 2

TAILLIGHT

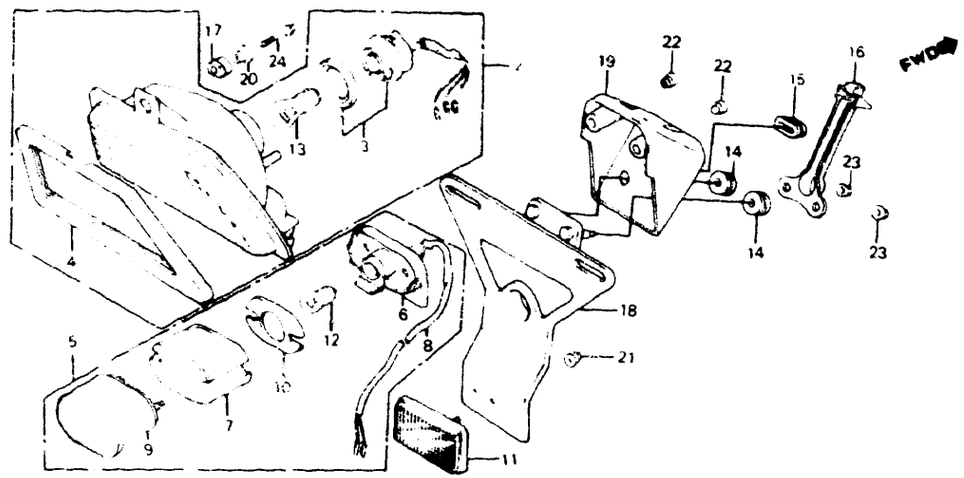

VF1000F 84

G43 8MB6-50

BLOCK NO F-28

REF NO	DESCRIPTION	AREA CODE	SERIAL NUMBER FROM	SERIAL NUMBER TO	QTY REQ	PART NUMBER	HONDA CODE
1	GASKET SEAL		-------	-------	1	33518-SA2-003	0845875
2	TAILLIGHT UNIT (12V 32/3CP)		-------	-------	1	33701-MB2-672	1792142
3	WIRE COMP TAILLIGHT		-------	-------	1	33708-MB2-671	1424969
4	GASKET BASE		-------	-------	1	33709-MB2-003	1424977
5	LIGHT ASSY LICENSE (12V 8W/4CP)		-------	-------	1	33720-MB2-003	1435775
6	BASE COMP		-------	-------	1	33721-MB2-003	1429026
7	LENS LICENSE		-------	-------	1	33722-MB1-003	1260538
	LENS LICENSE		-------	-------	1	33722-MB1-013	2291920
8	WIRE COMP LICENSE LIGHT		-------	-------	1	33725-MB2-003	1429034
9	COVER COMP LICENSE LIGHT		-------	-------	1	33727-ME4-671	1393362
10	GASKET LENS		-------	-------	1	33729-MB1-003	1260561
11	REFLECTOR RR REFLEX		-------	-------	1	33742-MB2-671	1401595
	REFLECTOR RR REFLEX		-------	-------	1	33742-MB2-672	1853829
12	BULB LICENSE LIGHT (12V4CP)		-------	-------	1	34616-568-671	0504522
	BULB LICENSE LIGHT (12V 4CP)		-------	-------	1	34902-500-003	0591529
	BULB LICENSE LIGHT (12V 4CP)		-------	-------	1	34908-272-000	2079226
	BULB LICENSE LIGHT (12V 4CP)		-------	-------	1	34909-505-003	0504563
	BULB LICENSE LIGHT (12V 4CP)		-------	-------	1	34909-505-610	0587147
13	BULB STOP & TAILLIGHT		-------	-------	1	34906-MG9-771	1700301

SC150* FRAME NO EM000017 TO EM003753
SC151* FRAME NO EM000003 TO EM000627

VF1000F 84

BLOCK NO F-28

REF NO	DESCRIPTION	AREA CODE	SERIAL NUMBER FROM	SERIAL NUMBER TO	QTY REQ	PART NUMBER	HONDA CODE
13	BULB, TAILLIGHT (12V32/3CP)		-------	-------	1	34906-341-671	0273540
14	RUBBER, FR. FENDER MOUNTING		-------	-------	2	61103-357-000	0329987
15	GROMMET, WIRE		-------	-------	1	80102-323-000	0255752
16	GUARD, WIRE		-------	-------	1	80103-MB2-000	1430834
17	RUBBER, TAILLIGHT CUSHION		-------	-------	1	80104-MB2-000	1435783
18	BRACKET, NUMBER PLATE		-------	-------	1	84701-MB6-670	1761048
19	BASE, LICENSE LIGHT		-------	-------	1	84703-MB2-670	1435791
20	COLLAR, TAILLIGHT MOUNTING		-------	-------	1	84706-163-670	0796169
21	NUT, FLANGE CAP, 5MM		-------	-------	1	90167-SA0-980	1213099
22	NUT, SPECIAL, 6MM		-------	-------	2	90302-MB2-000	1425248
23	NUT, FLANGE, 6MM		-------	-------	2	90302-187-000	1032093
24	BOLT, FLANGE, 6X14		-------	-------	1	95700-06014-00	0671198
	BOLT, FLANGE, 6X14		-------	-------	1	95701-06014-00	2410884

CONTENTS

TITLE	GRID
AIR CLEANER	1-E7
ALTERNATOR	1-B8
BATTERY	1-E5
BRAKE CALIPER FR	1-D10
BRAKE CALIPER RR	1-E1
BRAKE MASTER CYL FR	1-D4
BRAKE MASTER CYL RR	1-D12
CAM CHAIN	1-B5
CAMSHAFT	1-B4
CANISTER (AC)	1-F11
CARBURETOR (ASSY.)	1-C7
CARBURETOR COMPONENTS	1-C8
CHAIN CASE	1-E11
CLUTCH	1-D3
CLUTCH	1-B6
CLUTCH MASTER CYLINDER	1-D5
CONTROL SWITCHES	1-D3
COWL	1-F8
COWL RR	1-E4
CRANKCASE COVER L	1-B9
CRANKCASE COVER R	1-B6
CRANKSHAFT	1-C2
CYLINDER BLOCK	1-B12
CYLINDER HEAD COVER	1-B1
CYLINDER HEAD FR	1-B1
CYLINDER HEAD RR	1-B3
FENDER FR	1-D7
FENDER RR	1-F1
FRAME BODY	1-F6
FUEL PUMP	1-E6
FUEL TANK	1-E3
GASKET KIT A	1-C9
GASKET KIT B	1-C9
GEARSHIFT DRUM	1-C5
HANDLEBAR	1-D6
HEADLIGHT	1-D1
IGNITION COIL	1-F4
INSTRUMENTS	1-D2
MARK	1-F10
MUFFLER EXHAUST	1-E8
OIL FILTER	1-B11
OIL PAN	1-B11
OIL PUMP	1-B11
PEDAL BRAKE	1-E9
PEDAL GEARSHIFT	1-E9
PISTON	1-C2
PULSE GENERATOR	1-B7
RADIATOR	1-F5
SEAT	1-E4
SHOCK ABSORBER FR	1-D8
SHOCK ABSORBER RR	1-E12
SIDE COVER	1-E5
SPARK UNIT	1-F1
STAND	1-E10
STARTER CLUTCH	1-B7
STARTER MOTOR	1-B11
STEERING STEM	1-D7
STEP	1-E9
STRIPE	1-F10
SWINGARM	1-E11
TAILLIGHT	1-F3
TENSIONER	1-B5
THERMOSTAT	1-C6
TOOLS	1-F8
TOP BRIDGE	1-D6
TRANSMISSION	1-C4
TURN SIGNAL	1-F2
VALVE	1-B4
WATER PIPE	1-C6
WATER PUMP	1-B9
WHEEL FR	1-D11
WHEEL RR	1-E2
WIRE HARNESS	1-F4

GRID NO.

WIRE HARNESS • IGNITION COIL

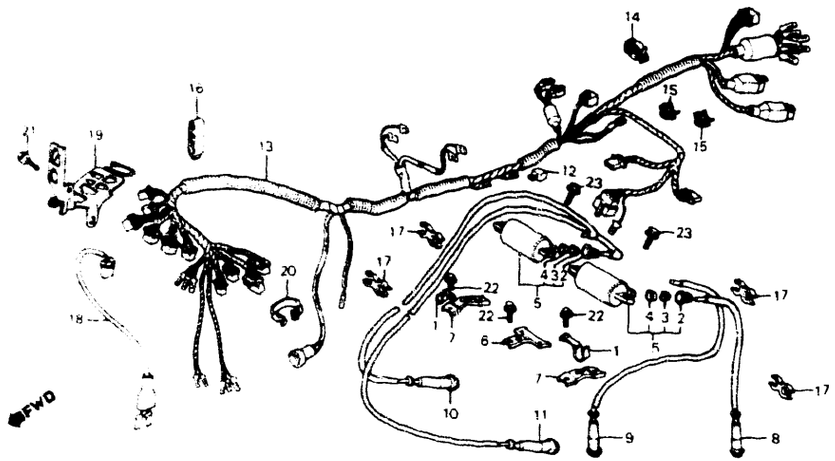

VF1000F '84

G43-BMB6 45

BLOCK NO. F-29

REF NO	DESCRIPTION	AREA CODE	SERIAL NUMBER FROM	SERIAL NUMBER TO	QTY REQ	PART NUMBER	HONDA CODE
1	CLAMP, RESERVE TANK TUBE		-------	-------	2	19119-MB6-000	1760172
2	CAP, SCREW		-------	-------	4	30501-428-003	1094911
3	SEAL, RUBBER		-------	-------	4	30502-428-003	1094929
4	WASHER, CAP		-------	-------	4	30503-428-003	1094937
5	COIL COMP, IGNITION		-------	-------	2	30510-MBO-701	1295930
6	STAY A, IGNITION COIL		-------	-------	1	30515-MB6-003	1776731
7	STAY B, IGNITION COIL		-------	-------	2	30516-MB6-003	1776749
8	CAP COMP, 1, COIL WIRE (R-L)		-------	-------	1	30731-MB6-000	1753813
9	CAP COMP, 2, COIL WIRE (R-R)		-------	-------	1	30732-MB2-000	1428820
10	CAP COMP, 3, COIL WIRE (F-R)		-------	-------	1	30733-MB2-153	1424894
11	CAP COMP, 4, COIL WIRE (F-L)		-------	-------	1	30734-MB2-153	1424902
12	RECTIFIER ASSY		-------	-------	1	31700-124-003	0351346
	RECTIFIER ASSY		-------	-------	1	31700-124-008	0692129
13	HARNESS, WIRE		-------	-------	1	32100-MB6-000	1749290
14	CLIP, HARNESS		-------	-------	1	32127-MBO-701	1384049
15	CLIP, WIRE HARNESS		-------	-------	2	32161-393-003	0445494
16	CLAMP, WIRE HARNESS		-------	-------	1	32162-MB6-000	1749308
17	CLAMP, COIL WIRE		-------	-------	4	32802-MB2-000	1424910
18	SUB WIRE, HORN		-------	-------	1	38111-MB6-000	1749647
19	BRACKET, COUPLER		-------	-------	1	61312-MB6-000	1750058

1-F 4

SC150* FRAME NO. EM000017 TO EM003753
SC151* FRAME NO. EM000003 TO EM000627

VF1000F '84

BLOCK NO. F-29

REF NO	DESCRIPTION	AREA CODE	SERIAL NUMBER FROM	SERIAL NUMBER TO	QTY REQ	PART NUMBER	HONDA CODE
20	BAND A2, WIRE		-------	-------	1	95014-61200	0255679
21	BOLT, FLANGE, 6X12		-------	-------	1	95700-06012-08	0252254
	BOLT, FLANGE, 6X12		-------	-------	1	95701-06012-08	2170793
22	BOLT, FLANGE, 6X14		-------	-------	3	95700-06014-08	0840587
	BOLT, FLANGE, 6X14		-------	-------	3	95701-06014-08	2374742
23	BOLT, FLANGE, 6X16		-------	-------	4	95700-06016-07	1007277
	BOLT, FLANGE, 6X16		-------	-------	4	95701-06016-07	2316578

CONTENTS

TITLE	GRID
AIR CLEANER	1-E7
ALTERNATOR	1-B8
BATTERY	1-E5
BRAKE CALIPER, FR	1-D10
BRAKE CALIPER, RR	1-E1
BRAKE MASTER CYL, FR	1-D4
BRAKE MASTER CYL, RR	1-D12
CAM CHAIN	1-B5
CAMSHAFT	1-B4
CANISTER (AC)	1-F11
CARBURETOR (ASSY.)	1-C7
CARBURETOR COMPONENTS	1-C8
CHAIN CASE	1-E11
CLUTCH	1-D3
CLUTCH	1-B6
CLUTCH MASTER CYLINDER	1-D5
CONTROL SWITCHES	1-D3
COWL	1-F8
COWL, RR	1-E4
CRANKCASE COVER, L	1-B9
CRANKCASE COVER, R	1-B6
CRANKSHAFT	1-C2
CYLINDER BLOCK	1-B12
CYLINDER HEAD COVER	1-B1
CYLINDER HEAD, FR	1-B1
CYLINDER HEAD, RR	1-B3
FENDER, FR	1-D7
FENDER, RR	1-F1
FRAME BODY	1-F6
FUEL PUMP	1-E6
FUEL TANK	1-E3
GASKET KIT A	1-C9
GASKET KIT B	1-C9
GEARSHIFT DRUM	1-C5
HANDLEBAR	1-D6
HEADLIGHT	1-D1
IGNITION COIL	1-F4
INSTRUMENTS	1-D2
MARK	1-F10
MUFFLER, EXHAUST	1-E8
OIL FILTER	1-B11
OIL PAN	1-B11
OIL PUMP	1-B11
PEDAL, BRAKE	1-E9
PEDAL, GEARSHIFT	1-E9
PISTON	1-C2
PULSE GENERATOR	1-B7
RADIATOR	1-F5
SEAT	1-E4
SHOCK ABSORBER, FR	1-D8
SHOCK ABSORBER, RR	1-E12
SIDE COVER	1-E5
SPARK UNIT	1-F1
STAND	1-E10
STARTER CLUTCH	1-B7
STARTER MOTOR	1-B11
STEERING STEM	1-D7
STEP	1-E9
STRIPE	1-F10
SWINGARM	1-E11
TAILLIGHT	1-F3
TENSIONER	1-B5
THERMOSTAT	1-C6
TOOLS	1-F8
TOP BRIDGE	1-D6
TRANSMISSION	1-C4
TURN SIGNAL	1-F2
VALVE	1-B4
WATER PIPE	1-C6
WATER PUMP	1-B9
WHEEL, FR	1-D11
WHEEL, RR	1-E2
WIRE HARNESS	1-F4

GRID NO.

1-F 4

RADIATOR

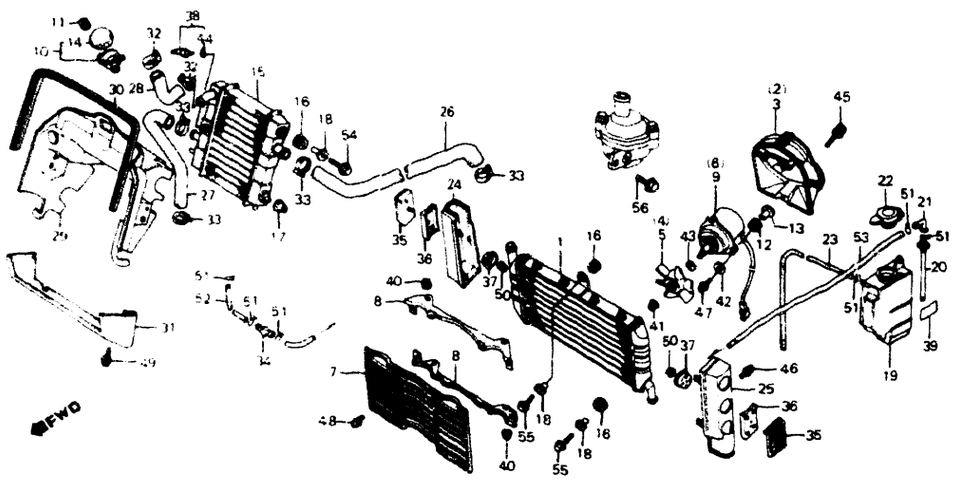

VF1000F 84

BLOCK NO F-30

G43-BMB8-48

REF NO	DESCRIPTION	AREA CODE	SERIAL NUMBER FROM	SERIAL NUMBER TO	QTY REQ	PART NUMBER	HONDA CODE
1	RADIATOR COMP MAIN		-------	-------	1	19010-MB6-003	1748680
2	SHROUD COMP R		-------	-------	1	19015-MB6-003	1748698
3	SHROUD COMP L		-------	-------	1	19020-MB6-003	1748706
4	FAN COMP R COOLING		-------	-------	1	19024-MB6-003	1753086
5	FAN COMP L COOLING		-------	-------	1	19025-MB6-003	1748714
6	MOTOR ASSY R FAN		-------	-------	1	19030-MB6-003	1748722
7	GRILLE RADIATOR		-------	-------	1	19032-MB2-000	1427863
8	BRACKET GRILLE		-------	-------	2	19033-MB6-003	1799733
9	MOTOR ASSY L FAN		-------	-------	1	19035-MB6-003	1748730
10	NECK ASSY FILLER		-------	-------	1	19035-ME9-003	1368075
11	RUBBER FILLER NECK STOPPER		-------	-------	1	19038-ME9-000	1368083
12	RUBBER MOUNTING		-------	-------	6	19031-HA7-671	2100576
	RUBBER MOUNTING		-------	-------	6	19041-MB6-003	1799741
13	COLLAR MOUNTING		-------	-------	6	19044-MB6-003	1799758
14	CAP COMP RADIATOR (ND)		-------	-------	1	19045-MB0-013	1781491
15	SUB RADIATOR COMP		-------	-------	1	19050-MB6-003	1748748
16	RUBBER RADIATOR MOUNTING		-------	-------	5	19051-KA4-000	1042266
17	RUBBER RADIATOR MOUNTING		-------	-------	2	19051-MB2-000	1427871
18	COLLAR RADIATOR MOUNTING		-------	-------	5	19052-MB0-000	1245398
19	TANK RESERVE		-------	-------	1	19101-MB6-000	1748755

SC150* FRAME NO EM000017 TO EM003753
SC151* FRAME NO EM000003 TO EM000627

VF1000F 84

BLOCK NO F-30

REF NO	DESCRIPTION	AREA CODE	SERIAL NUMBER FROM	SERIAL NUMBER TO	QTY REQ	PART NUMBER	HONDA CODE
20	TUBE, LEVEL		-------	-------	1	19102-MB6-000	1753144
21	JOINT, TUBE		-------	-------	1	19103-463-000	0881904
22	CAP, RESERVE TANK		-------	-------	1	19104-MB0-700	1308071
23	TUBE, OVER FLOW		-------	-------	1	19107-MB6-000	1753151
24	COVER, R. RADIATOR		-------	-------	1	19110-MB6-000	1748763
25	COVER, L. RADIATOR		-------	-------	1	19111-MB6-000	1748771
26	HOSE A, RADIATOR		-------	-------	1	19115-MB6-000	1748789
27	HOSE, RADIATOR (B)		-------	-------	1	19116-MB6-000	1748797
28	HOSE C, RADIATOR		-------	-------	1	19117-MB6-000	1748805
29	SHROUD, FR. RADIATOR (A)		-------	-------	1	19140-MB6-000	1748847
	SHROUD, FR. RADIATOR (A)		-------	-------	1	19140-MB6-630	2145928
30	RUBBER, FR. SHROUD		-------	-------	1	19141-MB6-000	1748854
31	COVER, SUB RADIATOR UNDER		-------	-------	1	19201-MB6-000	1748870
32	CLAMP, WATER HOSE		-------	-------	2	19506-KA4-000	1039635
33	CLAMP A, WATER HOSE		-------	-------	4	19516-MB6-000	1742402
34	JOINT, OIL TUBE		-------	-------	1	55102-166-000	1082767
35	REFLECTOR, FR. REFLEX		-------	-------	2	33741-MB2-671	1429042
36	BASE, REFLEX REFLECTOR		-------	-------	2	33752-MB2-670	1429059
37	BRACKET, REFLEX REFLECTOR		-------	-------	2	33753-MB2-670	1429067
38	THERMOSWITCH ASSY.		-------	-------	1	37760-MB6-013	1876150
39	LABEL, RESERVE TANK		-------	-------	1	87507-MB4-670	1425818
40	NUT-WASHER, 6MM		-------	-------	4	90311-GC3-000	1806926
41	NUT, TOOTHED, 5MM		-------	-------	2	90311-MB6-003	1755347
42	WASHER, SPECIAL		-------	-------	6	90501-MB6-003	1803014
43	WASHER, PLAIN, 7MM		-------	-------	2	90511-MB6-003	1755396
44	O-RING, 13.5X1.4		-------	-------	1	91307-PH7-660	2514651
	O-RING, 13.5X1.4		-------	-------	1	91307-611-000	0347906
45	BOLT-WASHER, 6X10		-------	-------	2	93493-06010-07	1510387
46	SCREW, PAN, 4X6		-------	-------	2	93500-04006-0G	0561688
47	SCREW, PAN, 4X20		-------	-------	6	93500-04020-0H	0347922
48	SCREW-WASHER, 4X10		-------	-------	4	93891-04010-07	1218635
	SCREW-WASHER, 4X10		-------	-------	4	93891-04010-08	0737775
49	SCREW-WASHER, 5X12		-------	-------	2	93893-05012-07	0692665
50	NUT, FLANGE, 5MM		-------	-------	2	94050-05000	0636[illegible]51
51	CLIP C11, TUBE		-------	-------	6	95002-70000	0053595
52	TUBE, 7X600		-------	-------	1	95005-70600-30	1762301
53	TUBE, 7X700		-------	-------	1	95005-70700-30	1761337
54	BOLT, FLANGE, 6X22		-------	-------	2	95700-06022-00	0483925
	BOLT, FLANGE, 6X22		-------	-------	2	95701-06022-00	2105823
55	BOLT, FLANGE, 6X25		-------	-------	3	95700-06025-07	0721076
	BOLT, FLANGE, 6X25		-------	-------	3	95701-06025-07	2449122
56	BOLT, FLANGE, 8X16		-------	-------	1	95700-08016-00	0631242

CONTENTS

TITLE	GRID
AIR CLEANER	1-E7
ALTERNATOR	1-B8
BATTERY	1-E5
BRAKE CALIPER, FR	1-D10
BRAKE CALIPER, RR	1-E1
BRAKE MASTER CYL. FR	1-D4
BRAKE MASTER CYL. RR	1-D12
CAM CHAIN	1-B5
CAMSHAFT	1-B4
CANISTER (AC)	1-F11
CARBURETOR (ASSY.)	1-C7
CARBURETOR COMPONENTS	1-C8
CHAIN CASE	1-E11
CLUTCH	1-D3
CLUTCH	1-B6
CLUTCH MASTER CYLINDER	1-D5
CONTROL SWITCHES	1-D3
COWL	1-F8
COWL, RR	1-E4
CRANKCASE COVER, L	1-B9
CRANKCASE COVER R	1-B6
CRANKSHAFT	1-C2
CYLINDER BLOCK	1-B12
CYLINDER HEAD COVER	1-B1
CYLINDER HEAD, FR	1-B1
CYLINDER HEAD, RR	1-B3
FENDER, FR.	1-D7
FENDER, RR	1-F1
FRAME BODY	1-F6
FUEL PUMP	1-E6
FUEL TANK	1-E3
GASKET KIT A	1-C9
GASKET KIT B	1-C9
GEARSHIFT DRUM	1-C5
HANDLEBAR	1-D6
HEADLIGHT	1-D1
IGNITION COIL	1-F4
INSTRUMENTS	1-D2
MARK	1-F10
MUFFLER, EXHAUST	1-E8
OIL FILTER	1-B11
OIL PAN	1-B11
OIL PUMP	1-B11
PEDAL, BRAKE	1-E9
PEDAL, GEARSHIFT	1-E9
PISTON	1-C2
PULSE GENERATOR	1-B7
RADIATOR	1-F5
SEAT	1-E4
SHOCK ABSORBER, FR	1-D8
SHOCK ABSORBER, RR	1-E12
SIDE COVER	1-E5
SPARK UNIT	1-F1
STAND	1-E10
STARTER CLUTCH	1-B7
STARTER MOTOR	1-B11
STEERING STEM	1-D7
STEP	1-E9
STRIPE	1-F10
SWINGARM	1-E11
TAILLIGHT	1-F3
TENSIONER	1-B5
THERMOSTAT	1-C6
TOOLS	1-F8
TOP BRIDGE	1-D6
TRANSMISSION	1-C4
TURN SIGNAL	1-F2
VALVE	1-B4
WATER PIPE	1-C6
WATER PUMP	1-B9
WHEEL, FR	1-D11
WHEEL, RR	1-E2
WIRE HARNESS	1-F4

GRID NO.

RADIATOR

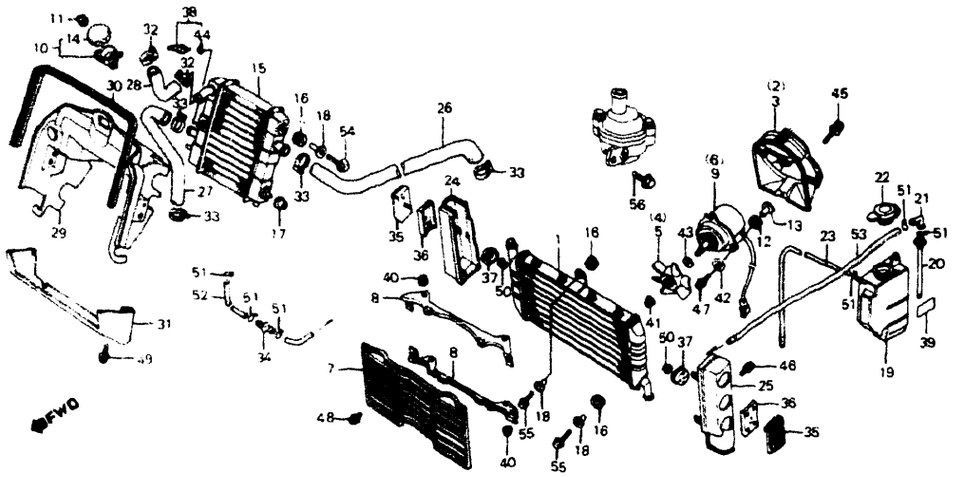

VF1000F 84

G43-BMB6-46

BLOCK NO. F-30

REF NO	DESCRIPTION	AREA CODE	SERIAL NUMBER FROM	SERIAL NUMBER TO	QTY REQ	PART NUMBER	HONDA CODE
56	BOLT, FLANGE, 8X16		-------	-------	1	95701-08016-00	2298396

1-F 6

SC150* FRAME NO EM000017 TO EM003753
SC151* FRAME NO EM000003 TO EM000627

FRAME BODY

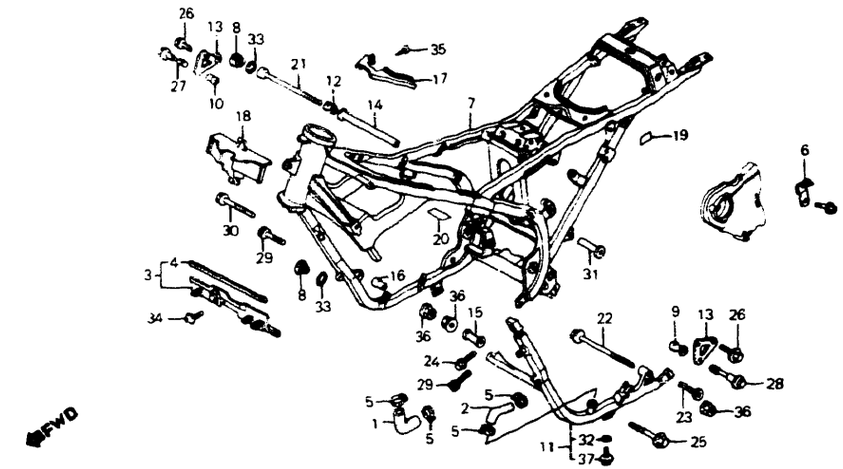

CAUTION OR WARNING LABELS MUST BE ORDERED SEPARATELY WHEN APPLICABLE

VF1000F'84

G43-BMB6-69

BLOCK NO. F-31

REF NO	DESCRIPTION	AREA CODE	SERIAL NUMBER FROM	SERIAL NUMBER TO	QTY REQ	PART NUMBER	HONDA CODE
1	HOSE, RADIATOR (D)		-------	-------	1	19118-MB6-000	1748813
2	HOSE, RADIATOR (E)		-------	-------	1	19120-MB6-000	1748821
3	PLATE, HEAT GUARD		-------	-------	1	19125-MB6-000	1748839
4	RUBBER, HEAT GUARD SEAL		-------	-------	1	19127-MB6-000	1760180
5	CLAMP A, WATER HOSE		-------	-------	4	19516-MB6-000	1742402
6	CLAMP, WIRE		-------	-------	1	32922-MB2-000	1424928
7	BODY COMP., FRAME *NH104MU* (PLEIADES SILVER METALLIC)	A	-------	-------	1	50100-MB6-000ZA	1749746
	BODY COMP., FRAME *NH104MU* (PLEIADES SILVER METALLIC)	A	-------	-------	1	50100-MB6-010ZA	1980390
	BODY COMP., FRAME *NH104MU* (PLEIADES SILVER METALLIC)	AC	-------	-------	1	50100-MB6-740ZA	1754340
	BODY COMP., FRAME *NH104MU* (PLEIADES SILVER METALLIC)	AC	-------	-------	1	50100-MB6-741ZA	1985282
8	CAP, ENGINE HANGER		-------	-------	2	50200-MB6-000	1754373
9	COLLAR, L. ENGINE HANGER UPPER		-------	-------	1	50208-MB2-000	1430172
10	COLLAR, R. ENGINE HANGER UPPER		-------	-------	1	50209-MB6-000	1749753
11	SUB FRAME COMP. *NH104MU* (PLEIADES SILVER METALLIC)	A	-------	-------	1	50210-MB6-000ZA	1749761

CONTENTS

TITLE	GRID
AIR CLEANER	1-E7
ALTERNATOR	1-B8
BATTERY	1-E5
BRAKE CALIPER, FR	1-D10
BRAKE CALIPER, RR	1-E1
BRAKE MASTER CYL. FR	1-D4
BRAKE MASTER CYL. RR	1-D12
CAM CHAIN	1-B5
CAMSHAFT	1-B4
CANISTER (AC)	1-F11
CARBURETOR (ASSY.)	1-C7
CARBURETOR COMPONENTS	1-C8
CHAIN CASE	1-E11
CLUTCH	1-D3
CLUTCH	1-B6
CLUTCH MASTER CYLINDER	1-D5
CONTROL SWITCHES	1-D3
COWL	1-F8
COWL, RR	1-E4
CRANKCASE COVER, L	1-B9
CRANKCASE COVER, R	1-B6
CRANKSHAFT	1-C2
CYLINDER BLOCK	1-B12
CYLINDER HEAD COVER	1-B1
CYLINDER HEAD, FR	1-B1
CYLINDER HEAD, RR	1-B3
FENDER, FR	1-D7
FENDER, RR	1-F1
FRAME BODY	1-F6
FUEL PUMP	1-E6
FUEL TANK	1-E3
GASKET KIT A	1-C9
GASKET KIT B	1-C9
GEARSHIFT DRUM	1-C5
HANDLEBAR	1-D6
HEADLIGHT	1-D1
IGNITION COIL	1-F4
INSTRUMENTS	1-D2
MARK	1-F10
MUFFLER, EXHAUST	1-E8
OIL FILTER	1-B11
OIL PAN	1-B11
OIL PUMP	1-B11
PEDAL, BRAKE	1-E9
PEDAL, GEARSHIFT	1-E9
PISTON	1-C2
PULSE GENERATOR	1-B7
RADIATOR	1-F5
SEAT	1-E4
SHOCK ABSORBER, FR	1-D8
SHOCK ABSORBER, RR	1-E12
SIDE COVER	1-E5
SPARK UNIT	1-F1
STAND	1-E10
STARTER CLUTCH	1-B7
STARTER MOTOR	1-B11
STEERING STEM	1-D7
STEP	1-E9
STRIPE	1-F10
SWINGARM	1-E11
TAILLIGHT	1-F3
TENSIONER	1-B5
THERMOSTAT	1-C6
TOOLS	1-F8
TOP BRIDGE	1-D6
TRANSMISSION	1-C4
TURN SIGNAL	1-F2
VALVE	1-B4
WATER PIPE	1-C6
WATER PUMP	1-B9
WHEEL, FR	1-D11
WHEEL, RR	1-E2
WIRE HARNESS	1-F4

GRID NO.

1-F 6

FRAME BODY

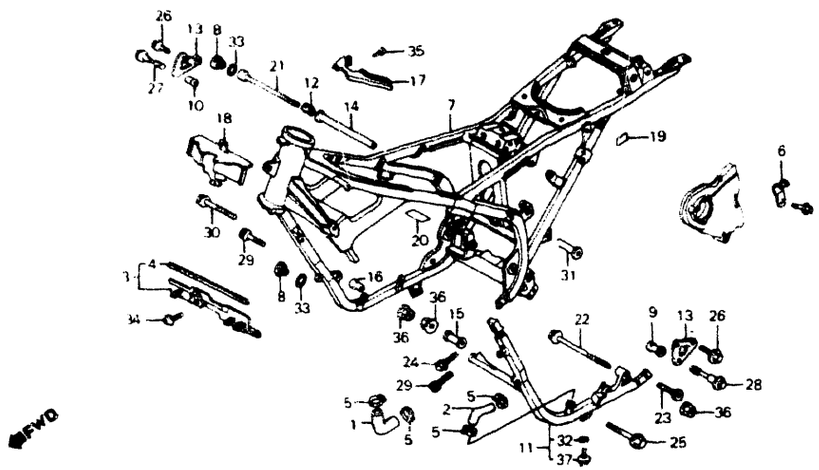

CAUTION OR WARNING LABELS MUST BE ORDERED SEPARATELY WHEN APPLICABLE

VF1000F '84 — G43-BM86 69 — BLOCK NO F-31

REF NO	DESCRIPTION	AREA CODE	SERIAL NUMBER FROM	SERIAL NUMBER TO	QTY REQ	PART NUMBER	HONDA CODE
11	SUB FRAME COMP *NH104MU* (PLEIADES SILVER METALLIC)	A	-------	-------	1	50210-MB6-010ZA	3145463
	SUB FRAME COMP *NH104MU* (PLEIADES SILVER METALLIC)	AC	-------	-------	1	50210-MB6-740ZA	1749779
12	COLLAR, R. ENGINE MOUNTING		-------	-------	1	50226-MB2-000	1430206
13	PLATE, ENGINE HANGER CENTER		-------	-------	2	50356-MB6-000	1749829
14	COLLAR, ENGINE HANGER UPPER		-------	-------	1	50361-MB2-000	1430271
15	COLLAR B, ENGINE HANGER		-------	-------	1	50362-MB0-000	1248723
16	COLLAR, R FR ENGINE HANGER		-------	-------	1	50362-MB2-000	1401629
17	COVER, HEAD PIPE GUSSET		-------	-------	1	61401-MB2-000	1425099
18	COVER COMP, FR		-------	-------	1	84610-MB6-000	1761030
19	LABEL, RR SHOCK ABSORBER CAUTION		-------	-------	1	87518-MB0-770	1316942
20	LABEL, RR SHOCK ABSORBER DAMPING FORCE ADJUSTMENT		-------	-------	1	87519-MB6-300	1761105
21	BOLT, SOCKET, 10X244		-------	-------	1	90100-MB6-000	1761154
22	BOLT, FLANGE, 10X300		-------	-------	1	90101-MB2-000	1431162
23	BOLT, SOCKET, 10X15		-------	-------	2	90103-MB2-000	1425214
24	BOLT, SOCKET, 10X23		-------	-------	1	90104-MB2-000	1425222
25	BOLT, FLANGE, 10X54		-------	-------	1	90105-MB2-000	1431170

1-F 7

SC150* FRAME NO. EM000017 TO EM003753
SC151* FRAME NO. EM000003 TO EM000627

VF1000F '84 — BLOCK NO F-31

REF NO	DESCRIPTION	AREA CODE	SERIAL NUMBER FROM	SERIAL NUMBER TO	QTY REQ	PART NUMBER	HONDA CODE
26	BOLT, FLANGE, 8X16		-------	-------	4	90106-MB6-000	1761196
27	BOLT, FLANGE, 8X42		-------	-------	1	90107-MB6-000	1802958
28	BOLT, FLANGE, 8X50		-------	-------	1	90108-MB6-000	1761220
29	BOLT, SOCKET, 10X20		-------	-------	2	90109-MB2-000	1401686
30	BOLT, FLANGE, 10X67		-------	-------	1	90110-MB2-000	1401694
31	NUT, SPECIAL, 10MM		-------	-------	1	90303-MB2-000	1425255
32	WASHER, SEALING, 6MM		-------	-------	1	90441-028-010	0014480
33	O-RING, 13.8X2.5		-------	-------	2	91303-MG7-003	2995447
	O-RING, 13.8X2.5		-------	-------	2	91303-377-000	0499525
	O-RING, 13.8X2.5		-------	-------	2	91303-426-000	1113372
34	SCREW-WASHER, 5X12		-------	-------	1	93891-05012-0A	0380634
35	SCREW, TAPPING, 4X12		-------	-------	1	93903-44380	1434646
36	NUT, FLANGE, 10MM		-------	-------	3	94050-10000	0483867
37	BOLT, FLANGE, 6X10		-------	-------	1	96000-06010-00	1085729
	BOLT, FLANGE, 6X10		-------	-------	1	96001-06010-00	2154656

CONTENTS

TITLE	GRID
AIR CLEANER	1-E7
ALTERNATOR	1-B8
BATTERY	1-E5
BRAKE CALIPER FR	1-D10
BRAKE CALIPER RR	1-E1
BRAKE MASTER CYL FR	1-D4
BRAKE MASTER CYL RR	1-D12
CAM CHAIN	1-B5
CAMSHAFT	1-B4
CANISTER (AC)	1-F11
CARBURETOR (ASSY.)	1-C7
CARBURETOR COMPONENTS	1-C8
CHAIN CASE	1-E11
CLUTCH	1-D3
CLUTCH	1-B6
CLUTCH MASTER CYLINDER	1-D5
CONTROL SWITCHES	1-D3
COWL	1-F8
COWL RR	1-E4
CRANKCASE COVER L	1-B9
CRANKCASE COVER R	1-B6
CRANKSHAFT	1-C2
CYLINDER BLOCK	1-B12
CYLINDER HEAD COVER	1-B1
CYLINDER HEAD FR	1-B1
CYLINDER HEAD RR	1-B3
FENDER FR	1-D7
FENDER RR	1-F1
FRAME BODY	1-F6
FUEL PUMP	1-E6
FUEL TANK	1-E3
GASKET KIT A	1-C9
GASKET KIT B	1-C9
GEARSHIFT DRUM	1-C5
HANDLEBAR	1-D6
HEADLIGHT	1-D1
IGNITION COIL	1-F4
INSTRUMENTS	1-D2
MARK	1-F10
MUFFLER, EXHAUST	1-E8
OIL FILTER	1-B11
OIL PAN	1-B11
OIL PUMP	1-B11
PEDAL, BRAKE	1-E9
PEDAL, GEARSHIFT	1-E9
PISTON	1-C2
PULSE GENERATOR	1-B7
RADIATOR	1-F5
SEAT	1-E4
SHOCK ABSORBER FR	1-D8
SHOCK ABSORBER RR	1-E12
SIDE COVER	1-E5
SPARK UNIT	1-F1
STAND	1-E10
STARTER CLUTCH	1-B7
STARTER MOTOR	1-B11
STEERING STEM	1-D7
STEP	1-E9
STRIPE	1-F10
SWINGARM	1-E11
TAILLIGHT	1-F3
TENSIONER	1-B5
THERMOSTAT	1-C6
TOOLS	1-F8
TOP BRIDGE	1-D6
TRANSMISSION	1-C4
TURN SIGNAL	1-F2
VALVE	1-B4
WATER PIPE	1-C6
WATER PUMP	1-B9
WHEEL, FR	1-D11
WHEEL, RR	1-E2
WIRE HARNESS	1-F4

GRID NO.

1-F 7

TOOLS

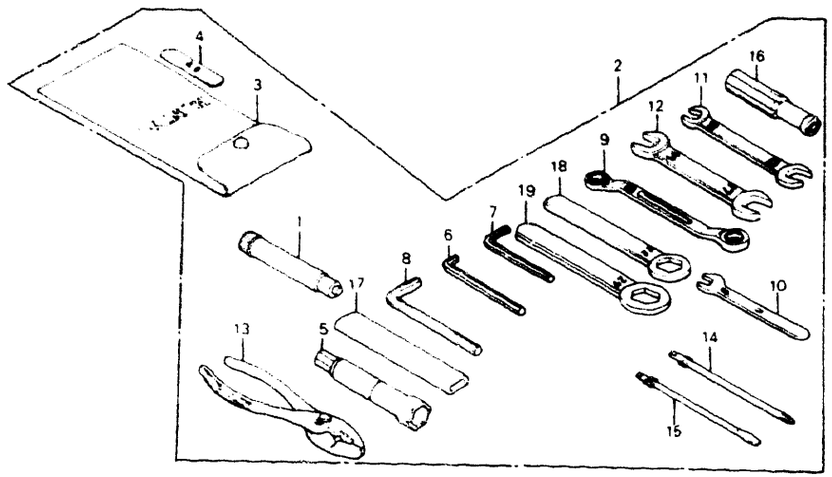

VF1000F 84

G43-BMB2-73 BLOCK NO. F-32

REF NO	DESCRIPTION	AREA CODE	SERIAL NUMBER FROM	SERIAL NUMBER TO	QTY REQ	PART NUMBER	HONDA CODE
1	VALVE, EXTENSION		-------	-------	1	51480-MB1-731	1762087
2	TOOL SET		-------	-------	1	89010-MB2-730	1440858
3	BAG, TOOL		-------	-------	1	89101-300-010	0192369
	BAG, TOOL		-------	-------	1	99005-02000	0268185
4	GAUGE, FEELER, 0.7		-------	-------	1	89103-371-000	0443663
5	WRENCH, PLUG		-------	-------	1	89216-MB2-000	1435825
6	WRENCH, HEX., 6MM		-------	-------	1	89221-371-000	0408716
7	WRENCH, HEX., 5MM		-------	-------	1	89221-429-000	0786046
8	WRENCH, HEX., 8MM		-------	-------	1	89222-371-000	0408724
9	WRENCH, EYE, 10X12		-------	-------	1	89227-461-000	0918813
10	SPANNER, 8		-------	-------	1	99001-08000	0342766
11	OPEN END WRENCH, 10X12		-------	-------	1	99001-10120	0187559
12	OPEN END WRENCH, 14X17		-------	-------	1	99001-14170	0187567
13	PLIERS, 135MM		-------	-------	1	99002-13500	0069252
14	DRIVER, 2. PHILLIPS SCREW		-------	-------	1	99003-10000	0052423
15	DRIVER, 2. STRAIGHT SLOT SCREW		-------	-------	1	99003-30000	0052449
16	GRIP DRIVER		-------	-------	1	99003-50000	0052464
17	HANDLE, EYE WRENCH, 12MM		-------	-------	1	99006-12000	0270496
18	WRENCH, EYE, 22MM		-------	-------	1	99006-22000	0268227
19	WRENCH, EYE, 27MM		-------	-------	1	99006-27000	1311539

SC150* FRAME NO.: EM000017 TO EM003753
SC151* FRAME NO.: EM000003 TO EM000627

COWL

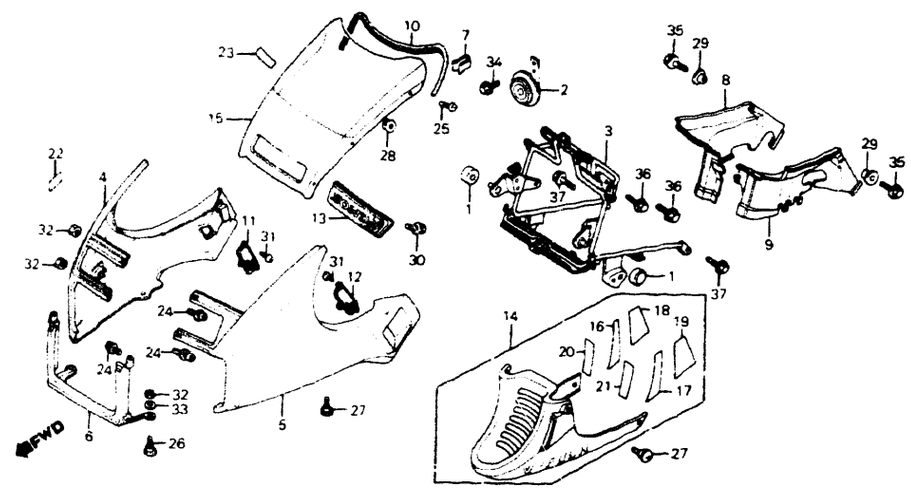

CAUTION OR WARNING LABELS MUST BE ORDERED SEPARATELY WHEN APPLICABLE

VF1000F 84

G43-BM96-48 BLOCK NO. F-33

REF NO	DESCRIPTION	AREA CODE	SERIAL NUMBER FROM	SERIAL NUMBER TO	QTY REQ	PART NUMBER	HONDA CODE
1	RUBBER, FUEL TANK FR.		-------	-------	2	17611-028-000	0131342
2	HORN COMP., HIGH		-------	-------	1	38110-MB6-671	1781954
3	STAY, FAIRING		-------	-------	1	64311-MB6-000	1750041
4	COWL SET, R. FR. SIDE *NH138* (SHASTA WHITE)		-------	-------	1	641A0-MB6-670ZA	1754837
	COWL SET, R. FR. SIDE *NH138* (SHASTA WHITE)		-------	-------	1	641A0-MB6-671ZA	1960053
5	COWL SET, L. FR. SIDE *NH138* (SHASTA WHITE)		-------	-------	1	641A1-MB6-670ZA	1754845
	COWL SET, L. FR. SIDE *NH138* (SHASTA WHITE)		-------	-------	1	641A1-MB6-671ZA	1960061
6	COWL SET, FR. CENTER *NH138/TYPE1*		-------	-------	1	641A5-MB6-000ZA	1754852
7	CLIP, SCREEN MOULDING		-------	-------	2	64102-MA3-720	1435833
8	COWL, R. INNER		-------	-------	1	64106-MB6-000	1750090
	COWL, R. INNER		-------	-------	1	64106-MB6-630	2740744

CONTENTS

TITLE	GRID
AIR CLEANER	1-E7
ALTERNATOR	1-B8
BATTERY	1-E5
BRAKE CALIPER, FR	1-D10
BRAKE CALIPER, RR	1-E1
BRAKE MASTER CYL. FR	1-D4
BRAKE MASTER CYL. RR	1-D12
CAM CHAIN	1-B5
CAMSHAFT	1-B4
CANISTER (AC)	1-F11
CARBURETOR (ASSY.)	1-C7
CARBURETOR COMPONENTS	1-C8
CHAIN CASE	1-E11
CLUTCH	1-D3
CLUTCH	1-B6
CLUTCH MASTER CYLINDER	1-D5
CONTROL SWITCHES	1-D3
COWL	1-F8
COWL, RR	1-E4
CRANKCASE COVER, L	1-B9
CRANKCASE COVER, R	1-B6
CRANKSHAFT	1-C2
CYLINDER BLOCK	1-B12
CYLINDER HEAD COVER	1-B1
CYLINDER HEAD, FR	1-B1
CYLINDER HEAD, RR	1-B3
FENDER, FR	1-D7
FENDER, RR	1-F1
FRAME BODY	1-F6
FUEL PUMP	1-E6
FUEL TANK	1-E3
GASKET KIT A	1-C9
GASKET KIT B	1-C9
GEARSHIFT DRUM	1-C5
HANDLEBAR	1-D6
HEADLIGHT	1-D1
IGNITION COIL	1-F4
INSTRUMENTS	1-D2
MARK	1-F10
MUFFLER, EXHAUST	1-E8
OIL FILTER	1-B11
OIL PAN	1-B11
OIL PUMP	1-B11
PEDAL, BRAKE	1-E9
PEDAL, GEARSHIFT	1-E9
PISTON	1-C2
PULSE GENERATOR	1-B7
RADIATOR	1-F5
SEAT	1-E4
SHOCK ABSORBER, FR	1-D8
SHOCK ABSORBER, RR	1-E12
SIDE COVER	1-E5
SPARK UNIT	1-F1
STAND	1-E10
STARTER CLUTCH	1-B7
STARTER MOTOR	1-B11
STEERING STEM	1-D7
STEP	1-E9
STRIPE	1-F10
SWINGARM	1-E11
TAILLIGHT	1-F3
TENSIONER	1-B5
THERMOSTAT	1-C6
TOOLS	1-F8
TOP BRIDGE	1-D6
TRANSMISSION	1-C4
TURN SIGNAL	1-F2
VALVE	1-B4
WATER PIPE	1-C6
WATER PUMP	1-B9
WHEEL, FR	1-D11
WHEEL, RR	1-E2
WIRE HARNESS	1-F4

GRID NO.

1-F 8

COWL

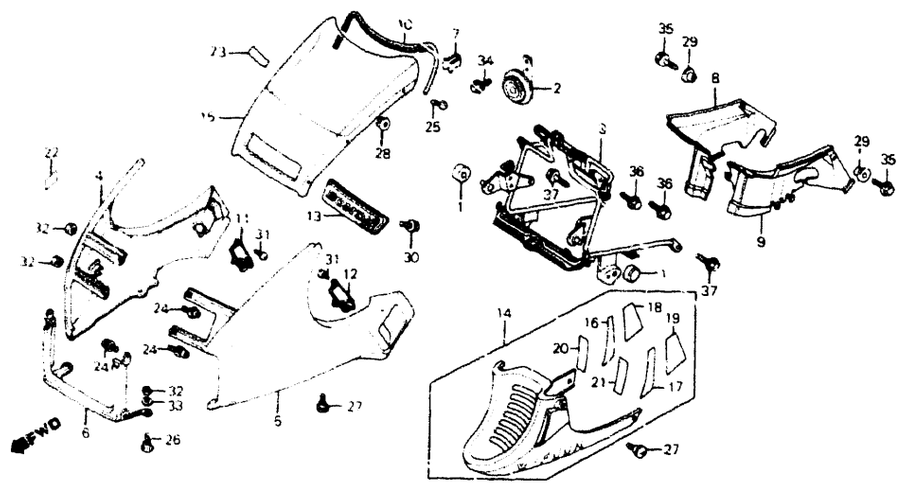

CAUTION OR WARNING LABELS MUST BE ORDERED SEPARATELY WHEN APPLICABLE

VF1000F 84 — G43 BMB6-48 — BLOCK NO. F-33

REF NO	DESCRIPTION	AREA CODE	SERIAL NUMBER FROM	SERIAL NUMBER TO	QTY REQ	PART NUMBER	HONDA CODE
9	COWL, L INNER		-------	-------	1	64107-MB6-000	1750108
	COWL, L INNER		-------	-------	1	64107-MB6-630	2660660
10	MOULDING, WIND SCREEN		-------	-------	1	64108-MB6-000	1750116
11	COVER, R SIDE DUCT		-------	-------	1	64109-MB6-000	1750124
12	COVER, L SIDE DUCT		-------	-------	1	64114-MB6-000	1750132
13	COVER, DUCT		-------	-------	1	64116-MB6-000	1754860
14	COWL SET, UNDER "NH138" (TYPE3) (SHASTA WHITE)		-------	-------	1	642A4-MB6-000ZC	1754894
15	SCREEN, WIND		-------	-------	1	64200-MB6-000	1750165
	SCREEN, WIND		-------	-------	1	64200-MB6-010	1960079
16	GUARD A, R LOWER COWL HEAT		-------	-------	1	64242-MB6-000	1780089
	GUARD A, R LOWER COWL HEAT		-------	-------	1	64242-MB6-300	1760883
17	GUARD A, L LOWER COWL HEAT		-------	-------	1	64243-MB6-000	1780097
	GUARD A, L LOWER COWL HEAT		-------	-------	1	64243-MB6-300	1760891
18	GUARD B, R LOWER COWL HEAT		-------	-------	1	64246-MB6-000	1780105
	GUARD B, R LOWER COWL HEAT		-------	-------	1	64246-MB6-300	1760909
19	GUARD B, L LOWER COWL HEAT		-------	-------	1	64247-MB6-000	1780113
	GUARD B, L LOWER COWL HEAT		-------	-------	1	64247-MB6-300	1760917
20	GUARD C, R LOWER COWL HEAT		-------	-------	1	64248-MB6-000	1780121

SC150* FRAME NO.: EM000017 TO EM003753
SC151* FRAME NO.: EM000003 TO EM000627

VF1000F 84 — BLOCK NO. F-33

REF NO	DESCRIPTION	AREA CODE	SERIAL NUMBER FROM	SERIAL NUMBER TO	QTY REQ	PART NUMBER	HONDA CODE
20	GUARD C, R LOWER COWL HEAT		-------	-------	1	64248-MB6-300	1760925
21	GUARD C, L LOWER COWL HEAT		-------	-------	1	64249-MB6-300	1760933
22	LABEL, FAIRING MARK		-------	-------	1	87515-MB6-670	1761089
23	LABEL, WIND SCREEN CAUTION		-------	-------	1	87522-463-930	1435908
24	SCREW-WASHER, 4X14		-------	-------	6	90102-MB6-000	1776699
25	SCREW, SCREEN SETTING		-------	-------	6	90107-KE8-700	1762145
26	SCREW, SPECIAL, 4X11		-------	-------	2	90112-MB6-000	1750272
27	SCREW, FAIRING MOUNT		-------	-------	6	90112-MC7-000	1210715
28	NUT-WASHER, 4MM		-------	-------	6	90202-KE8-700	1762194
29	WASHER B, CHAIN CASE MOUNT		-------	-------	2	90554-240-000	0149765
30	SCREW, TAPPING, 3X6		-------	-------	2	93901-22020	1096775
31	SCREW, TAPPING, 4X8		-------	-------	6	93903-34180	0935098
32	NUT, HEX., 4MM		-------	-------	4	94001-04080-0S	0562116
33	WASHER, PLAIN, 4MM		-------	-------	2	94103-04800	0638247
34	BOLT, FLANGE, 6X10		-------	-------	1	95700-06010-07	0663930
	BOLT, FLANGE, 6X10		-------	-------	1	95701-06010-07	2374734
35	BOLT, FLANGE, 6X12		-------	-------	2	95700-06012-08	0252254
	BOLT, FLANGE, 6X12		-------	-------	2	95701-06012-08	2170793
36	BOLT, FLANGE, 8X16		-------	-------	2	95700-08016-07	1251891
	BOLT, FLANGE, 8X16		-------	-------	2	95701-08016-07	2724003
37	BOLT, FLANGE, 6X12		-------	-------	2	96000-06012-07	1103019
	BOLT, FLANGE, 6X12		-------	-------	2	96001-06012-07	2105948

CONTENTS

TITLE	GRID
AIR CLEANER	1-E7
ALTERNATOR	1-B8
BATTERY	1-E5
BRAKE CALIPER, FR	1-D10
BRAKE CALIPER, RR	1-E1
BRAKE MASTER CYL, FR	1-D4
BRAKE MASTER CYL, RR	1-D12
CAM CHAIN	1-B5
CAMSHAFT	1-B4
CANISTER (AC)	1-F11
CARBURETOR (ASSY.)	1-C7
CARBURETOR COMPONENTS	1-C8
CHAIN CASE	1-E11
CLUTCH	1-D3
CLUTCH	1-B6
CLUTCH MASTER CYLINDER	1-D5
CONTROL SWITCHES	1-D3
COWL	1-F8
COWL, RR	1-E4
CRANKCASE COVER, L	1-B9
CRANKCASE COVER, R	1-B6
CRANKSHAFT	1-C2
CYLINDER BLOCK	1-B12
CYLINDER HEAD COVER	1-B1
CYLINDER HEAD, FR	1-B1
CYLINDER HEAD, RR	1-B3
FENDER, FR	1-D7
FENDER, RR	1-F1
FRAME BODY	1-F6
FUEL PUMP	1-E6
FUEL TANK	1-E3
GASKET KIT A	1-C9
GASKET KIT B	1-C9
GEARSHIFT DRUM	1-C5
HANDLEBAR	1-D6
HEADLIGHT	1-D1
IGNITION COIL	1-F4
INSTRUMENTS	1-D2
MARK	1-F10
MUFFLER, EXHAUST	1-E8
OIL FILTER	1-B11
OIL PAN	1-B11
OIL PUMP	1-B11
PEDAL, BRAKE	1-E9
PEDAL, GEARSHIFT	1-E9
PISTON	1-C2
PULSE GENERATOR	1-B7
RADIATOR	1-F5
SEAT	1-E4
SHOCK ABSORBER, FR	1-D8
SHOCK ABSORBER, RR	1-E12
SIDE COVER	1-E5
SPARK UNIT	1-F1
STAND	1-E10
STARTER CLUTCH	1-B7
STARTER MOTOR	1-B11
STEERING STEM	1-D7
STEP	1-E9
STRIPE	1-F10
SWINGARM	1-E11
TAILLIGHT	1-F3
TENSIONER	1-B5
THERMOSTAT	1-C6
TOOLS	1-F8
TOP BRIDGE	1-D6
TRANSMISSION	1-C4
TURN SIGNAL	1-F2
VALVE	1-B4
WATER PIPE	1-C6
WATER PUMP	1-B9
WHEEL, FR	1-D11
WHEEL, RR	1-E2
WIRE HARNESS	1-F4

GRID NO.

STRIPE • MARK

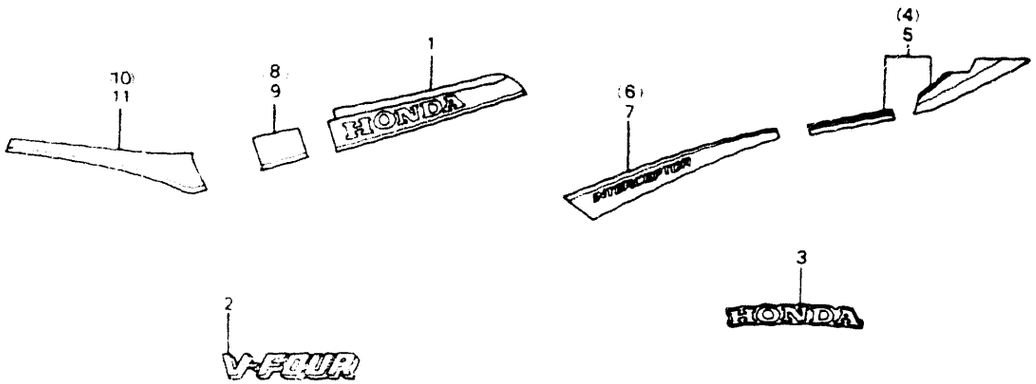

VF1000F 84

G43 BMB6 61

BLOCK NO F-34

REF NO	DESCRIPTION	AREA CODE	SERIAL NUMBER FROM	SERIAL NUMBER TO	QTY REQ	PART NUMBER	HONDA CODE
1	STRIPE, FUEL TANK (A.M.) "TYPE1"		-------	-------	1	17508-MB6-670ZA	1752849
2	MARK, UNDER COWL (A.M.) (TYPE3)		-------	-------	2	64245-MB6-300ZC	1754928
3	MARK, RR. COWL (A.M.) "TYPE1"		-------	-------	1	77209-MB6-300ZA	1755024
4	STRIPE, R. RR. COWL (A.M.) "TYPE1"		-------	-------	1	77228-MB6-300ZA	1755032
5	STRIPE, L. RR. COWL (A.M.) "TYPE1"		-------	-------	1	77229-MB6-300ZA	1755040
6	STRIPE, R. SIDE COVER (A.M.) "TYPE1"		-------	-------	1	83612-MB6-670ZA	1755156
7	STRIPE, L. SIDE COVER (A.M.) "TYPE1"		-------	-------	1	83613-MB6-670ZA	1755164
8	STRIPE, B. R. FR. COWL (A.M.) "TYPE1"		-------	-------	1	87115-MB6-670ZA	1755206
9	STRIPE, B. L. FR. COWL (A.M.) "TYPE1"		-------	-------	1	87116-MB6-670ZA	1755214
10	STRIPE, A. R. FR. COWL (A.M.) "TYPE1"		-------	-------	1	87117-MB6-670ZA	1755222

SC150* FRAME NO. EM000017 TO EM003753
SC151* FRAME NO. EM000003 TO EM000627

VF1000F 84

BLOCK NO F-34

REF NO	DESCRIPTION	AREA CODE	SERIAL NUMBER FROM	SERIAL NUMBER TO	QTY REQ	PART NUMBER	HONDA CODE
11	STRIPE, A. L. FR. COWL (A.M.) "TYPE1"		-------	-------	1	87118-MB6-670ZA	1755230

CONTENTS

TITLE	GRID
AIR CLEANER	1-E7
ALTERNATOR	1-B8
BATTERY	1-E5
BRAKE CALIPER, FR.	1-D10
BRAKE CALIPER, RR.	1-E1
BRAKE MASTER CYL., FR.	1-D4
BRAKE MASTER CYL., RR.	1-D12
CAM CHAIN	1-B5
CAMSHAFT	1-B4
CANISTER (AC)	1-F11
CARBURETOR (ASSY.)	1-C7
CARBURETOR COMPONENTS	1-C8
CHAIN CASE	1-E1*
CLUTCH	1-D3
CLUTCH	1-B6
CLUTCH MASTER CYLINDER	1-D5
CONTROL SWITCHES	1-D3
COWL	1-F8
COWL, RR.	1-E4
CRANKCASE COVER, L.	1-B9
CRANKCASE COVER, R.	1-B6
CRANKSHAFT	1-C2
CYLINDER BLOCK	1-B12
CYLINDER HEAD COVER	1-B1
CYLINDER HEAD, FR.	1-B1
CYLINDER HEAD, RR.	1-B3
FENDER, FR.	1-D7
FENDER, RR.	1-F1
FRAME BODY	1-F6
FUEL PUMP	1-E6
FUEL TANK	1-E3
GASKET KIT A	1-C9
GASKET KIT B	1-C9
GEARSHIFT DRUM	1-C5
HANDLEBAR	1-D6
HEADLIGHT	1-D1
IGNITION COIL	1-F4
INSTRUMENTS	1-D2
MARK	1-F10
MUFFLER, EXHAUST	1-E8
OIL FILTER	1-B11
OIL PAN	1-B11
OIL PUMP	1-B11
PEDAL, BRAKE	1-E9
PEDAL, GEARSHIFT	1-E9
PISTON	1-C2
PULSE GENERATOR	1-B7
RADIATOR	1-F5
SEAT	1-E4
SHOCK ABSORBER, FR.	1-D8
SHOCK ABSORBER, RR.	1-E12
SIDE COVER	1-E5
SPARK UNIT	1-F1
STAND	1-E10
STARTER CLUTCH	1-B7
STARTER MOTOR	1-B11
STEERING STEM	1-D7
STEP	1-E9
STRIPE	1-F10
SWINGARM	1-E11
TAILLIGHT	1-F3
TENSIONER	1-B5
THERMOSTAT	1-C6
TOOLS	1-F8
TOP BRIDGE	1-D6
TRANSMISSION	1-C4
TURN SIGNAL	1-F2
VALVE	1-B4
WATER PIPE	1-C6
WATER PUMP	1-B9
WHEEL, FR.	1-D11
WHEEL, RR.	1-E2
WIRE HARNESS	1-F4

GRID NO.

CANISTER (AC)

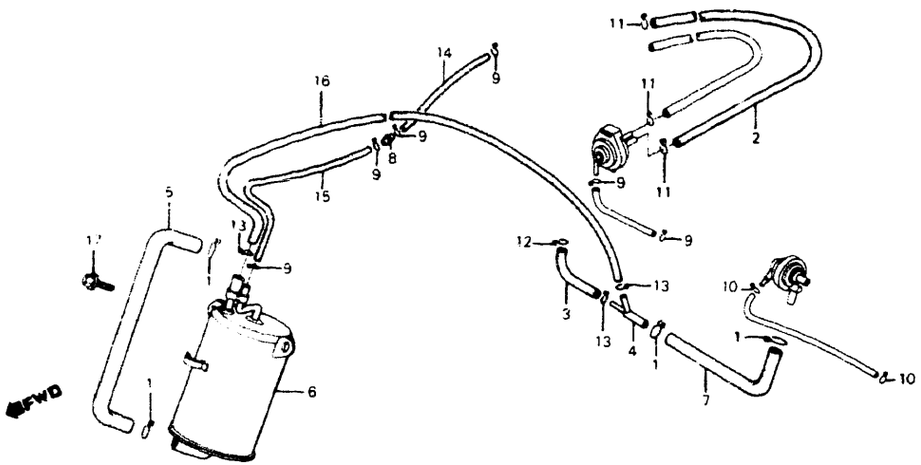

VF1000F '84

G43-BMB6-62

BLOCK NO. F-35

REF NO	DESCRIPTION	AREA CODE	SERIAL NUMBER FROM	SERIAL NUMBER TO	QTY REQ	PART NUMBER	HONDA CODE
1	CLIP, OIL DRAIN TUBE	AC	-------	-------	4	15707-634-000	0366120
2	TUBE, OUTER VENT	AC	-------	-------	1	16954-MB6-740	1806686
3	TUBE, AIR VENT CONTROL VALVE	AC	-------	-------	1	17316-MB6-740	1784073
4	JOINT, 3 WAY	AC	-------	-------	1	17330-MB6-741	1799402
5	HOSE, CANISTER	AC	-------	-------	1	17401-MB6-740	1748599
6	CANISTER COMP.	AC	-------	-------	1	17410-MB6-741	1752807
7	TUBE, PURGE CONTROL VALVE JOINT	AC	-------	-------	1	17415-MB6-740	1799410
8	JOINT B, WASHER TUBE	AC	-------	-------	1	38562-663-920	0604579
9	CLIP B7, TUBE	AC	-------	-------	6	95002-02070	0250639
10	CLIP B8, TUBE	AC	-------	-------	2	95002-02080	0250647
11	CLIP B12.5, TUBE	AC	-------	-------	3	95002-02130	0323352
12	CLIP, TUBE, 50MM	AC	-------	-------	1	95002-50000	0053447
13	CLIP C11, TUBE	AC	-------	-------	3	95002-70000	0053595
14	TUBE, 3.5X250	AC	-------	-------	1	95005-35250-20	0614701
15	TUBE, 3.5X570	AC	-------	-------	1	95005-35570-20	2033165
16	TUBE, 5.3X680	AC	-------	-------	1	95005-55680-20	1806975
17	BOLT, FLANGE, 6X20	AC	-------	-------	2	95700-06020-07	0476168
	BOLT, FLANGE, 6X20	AC	-------	-------	2	95701-06020-07	2251288

SC150* FRAME NO. EM000017 TO EM003753
SC151* FRAME NO. EM000003 TO EM000627

INTENTIONALLY LEFT BLANK

CONTENTS

TITLE	GRID
AIR CLEANER	1-E7
ALTERNATOR	1-B8
BATTERY	1-E5
BRAKE CALIPER, FR	1-D10
BRAKE CALIPER, RR	1-E1
BRAKE MASTER CYL, FR	1-D4
BRAKE MASTER CYL, RR	1-D12
CAM CHAIN	1-B5
CAMSHAFT	1-B4
CANISTER (AC)	1-F11
CARBURETOR (ASSY.)	1-C7
CARBURETOR COMPONENTS	1-C8
CHAIN CASE	1-E11
CLUTCH	1-D3
CLUTCH	1-B6
CLUTCH MASTER CYLINDER	1-D5
CONTROL SWITCHES	1-D3
COWL	1-F8
COWL, RR	1-E4
CRANKCASE COVER, L	1-B9
CRANKCASE COVER, R	1-B6
CRANKSHAFT	1-C2
CYLINDER BLOCK	1-B12
CYLINDER HEAD COVER	1-B1
CYLINDER HEAD, FR	1-B1
CYLINDER HEAD, RR	1-B3
FENDER, FR	1-D7
FENDER, RR	1-F1
FRAME BODY	1-F6
FUEL PUMP	1-E6
FUEL TANK	1-E3
GASKET KIT A	1-C9
GASKET KIT B	1-C9
GEARSHIFT DRUM	1-C5
HANDLEBAR	1-D6
HEADLIGHT	1-D1
IGNITION COIL	1-F4
INSTRUMENTS	1-D2
MARK	1-F10
MUFFLER, EXHAUST	1-E8
OIL FILTER	1-B11
OIL PAN	1-B11
OIL PUMP	1-B11
PEDAL, BRAKE	1-E9
PEDAL, GEARSHIFT	1-E9
PISTON	1-C2
PULSE GENERATOR	1-B7
RADIATOR	1-F5
SEAT	1-E4
SHOCK ABSORBER, FR	1-D8
SHOCK ABSORBER, RR	1-F12
SIDE COVER	1-E5
SPARK UNIT	1-F1
STAND	1-E10
STARTER CLUTCH	1-B7
STARTER MOTOR	1-B11
STEERING STEM	1-D7
STEP	1-E3
STRIPE	1-F10
SWINGARM	1-E11
TAILLIGHT	1-F3
TENSIONER	1-B5
THERMOSTAT	1-C6
TOOLS	1-F8
TOP BRIDGE	1-D6
TRANSMISSION	1-C4
TURN SIGNAL	1-F2
VALVE	1-B4
WATER PIPE	1-C6
WATER PUMP	1-B9
WHEEL, FR	1-D11
WHEEL, RR	1-E2
WIRE HARNESS	1-F4

GRID NO.

1-F 11

PART NUMBER INDEX

PART NUMBER	GRID	PAGE
(0)		
061A1-MB6-010	1-C9	42
061B1-MB6-000	1-C9	43
(1)		
11000-MB6-000	1-B12	25
11000-MB6-010	1-B12	25
11000-MB6-020	1-B12	25
11000-MB6-030	1-B12	25
11207-MB0-000	1-B12	25
11210-MB6-000	1-B11	23
11315-MB0-010	1-B11	23
	1-C9	43
11330-MB6-000	1-B6	12
11331-MB6-000	1-B6	12
11350-MB6-000	1-B9	19
11394-MB0-000	1-B6	12
	1-C9	43
11631-MB6-000	1-B8	17
11636-MB0-000	1-B8	17
	1-C9	43
11641-MB2-000	1-B8	17
11642-MB0-000	1-B8	17
	1-C9	43
11651-MB6-000	1-B9	19
11661-MB6-000	1-B9	19
11663-MB2-000	1-B9	19
11666-MB2-000	1-B9	19
	1-C9	43
12204-MB0-405	1-B1	3
	1-B3	6
12209-422-005	1-B4	8
	1-C9	42
12210-MB6-000	1-B1	3
12210-MB6-010	1-B1	3
12210-MB6-020	1-B1	3
12210-MB6-030	1-B1	3
12211-MB6-000	1-B1	3
	1-B3	6
12211-MB6-010	1-B1	3
	1-B3	6
12211-MB6-020	1-B1	3
	1-B3	6
12212-MB6-000	1-B1	3
	1-B3	6
12212-MB6-010	1-B1	3
	1-B3	6
12212-MB6-020	1-B1	3
	1-B3	6
12220-MB6-000	1-B3	6
12220-MB6-010	1-B3	6
12220-MB6-020	1-B3	6
12220-MB6-030	1-B3	6
12230-MB0-000	1-B1	3
	1-B3	6
12230-MB0-010	1-B1	3
	1-B3	6
12240-MB6-000	1-B1	3
12251-MB6-000	1-B1	3
	1-B3	6
	1-C9	42
12251-MB6-010	1-B1	3
	1-B3	6
	1-C9	42
12251-MB6-020	1-B1	3
	1-B3	6
	1-C9	42
12251-MB6-030	1-B1	3
	1-B3	6
	1-C9	42
12311-MB6-000	1-B1	2
12321-MB6-000	1-B1	2
12325-MB6-000	1-B1	2
12326-MB6-000	1-B1	2
12326-MB6-020	1-B1	2
12327-MB6-000	1-B1	2
12391-MB6-000	1-B1	2
	1-C9	42
13011-MB6-305	1-C2	29
13011-MB6-315	1-C2	29
13011-MM5-640	1-C2	29
13012-MB6-305	1-C2	29
13012-MB6-315	1-C2	29
13012-MM5-640	1-C2	29
13013-MB6-305	1-C2	29
13013-MB6-315	1-C2	29
13101-MB6-000	1-C2	29
13102-MB6-305	1-C2	29
13103-MB6-305	1-C2	29
13111-GK8-000	1-B7	15
13111-MB6-000	1-C2	29
13111-122-000	1-B7	15
13201-MB6-000	1-C2	29
13201-MB6-010	1-C2	29
13202-MB6-000	1-C2	29
13202-MB6-010	1-C2	29
13203-MB6-000	1-C2	29
13203-MB6-010	1-C2	29
13203-MB6-080	1-C2	29
13204-MB6-000	1-C2	29
13204-MB6-010	1-C2	29
13205-MB6-000	1-C2	29
13205-MB6-010	1-C2	29
13206-MB6-000	1-C2	29
13206-MB6-010	1-C2	29
13207-MB6-010	1-C2	29
13208-MB6-000	1-C2	29
13208-MB6-010	1-C2	29
13209-MB6-000	1-C2	29
13209-MB6-010	1-C2	29
13210-MB6-000	1-C2	29
13210-MB6-010	1-C2	29
13213-MC7-004	1-C2	29
13224-MB6-013	1-C2	29
13225-MB6-013	1-C2	29
13226-MB6-013	1-C2	29
13300-MB6-000	1-C2	29
13300-MB6-010	1-C2	29
13313-MB6-003	1-C3	31
13314-MB6-003	1-C3	31
13315-MB6-003	1-C3	31
14111-MB6-000	1-B4	8
14111-MB6-010	1-B4	8
14111-MB6-306	1-B4	8
14121-MB6-000	1-B4	8
14121-MB6-010	1-B4	8
14121-MB6-306	1-B4	8
14131-MB6-000	1-B4	8
14131-MB6-010	1-B4	8
14131-MB6-306	1-B4	8
14141-MB6-000	1-B4	8
14141-MB6-010	1-B4	8
14141-MB6-306	1-B4	8
14321-MB6-000	1-B5	10
14401-MB6-003	1-B5	10
14510-MB6-000	1-B5	10
14510-MB6-010	1-B5	10
14510-MB6-020	1-B5	10
14514-MB6-003	1-B5	10
14515-MB6-000	1-B5	10
14515-MB6-305	1-B5	10
14520-MB6-000	1-B5	10
14521-MB0-000	1-B5	10
14522-MB6-300	1-B5	10
14525-MB0-010	1-B5	10
14526-MB0-000	1-B5	10
14530-MB6-000	1-B5	10
14533-MB0-000	1-B5	10
14540-MB6-000	1-B5	11
14541-MB6-000	1-B5	11
14550-MB6-000	1-B5	11
14560-MB6-000	1-B5	11
14611-MB6-010	1-B4	8
14631-KE8-000	1-B4	8
14711-MB6-000	1-B4	8
14721-MB6-000	1-B4	8
14751-MB6-003	1-B4	8
14761-MB6-003	1-B4	8
14771-MB6-000	1-B4	8
14775-422-000	1-B4	9
14776-MB0-770	1-B4	9
14781-MB4-000	1-B4	9
15100-MB6-000	1-B11	23
15131-MB6-000	1-B6	13
15134-MB6-000	1-B11	23
15151-MB6-000	1-B11	23
15153-MB6-000	1-B11	23
15154-425-000	1-B11	23
15161-ME5-003	1-B11	23
15220-MB0-010	1-B11	23
15410-MJ0-003	1-B11	23
15410-MJ0-004	1-B11	23
15511-MB0-000	1-B11	23
15650-MB2-000	1-B6	12
15707-634-000	1-F11	114
16010-MB0-671	1-C8	40

PART NUMBER INDEX

PART NUMBER	GRID	PAGE
16010-MB0-871	1-C8	40
16010-MB4-621	1-C8	40
16010-MB4-622	1-C8	40
16010-MB6-681	1-C8	40
16011-MB0-671	1-C8	40
16011-MR6-671	1-C8	40
16013-MB0-671	1-C8	40
16015-MB0-671	1-C8	40
16016-MF5-671	1-C8	40
16017-MB4-671	1-C7	38
16018-MB0-671	1-C7	38
16018-MK3-771	1-C7	38
16019-MB6-671	1-C7	38
16022-MB1-771	1-C7	38
16025-MB4-671	1-C7	38
16026-KE7-003	1-C7	38
16026-MB0-671	1-C7	38
16028-KR3-671	1-C7	38
16028-MB0-671	1-C7	38
16029-MB0-671	1-C8	40
16031-MB0-671	1-C7	38
16032-MB4-671	1-C7	38
16035-MB6-671	1-C7	38
16037-MB4-671	1-C8	40
16042-MB6-671	1-C7	38
16046-MA6-003	1-C8	40
16047-KE7-003	1-C7	38
16050-MB4-671	1-C8	40
16051-MB4-671	1-C8	40
16052-MB0-671	1-C8	40
16053-MB0-671	1-C8	40
16080-MB0-671	1-C7	38
16094-MB2-671	1-C7	38
16100-MB6-671	1-C7	38
16100-MB6-881	1-C7	38
16100-MB6-882	1-C7	39
16101-MB6-671	1-C7	39
16101-MB6-672	1-C7	39
16101-MB6-881	1-C7	39
16102-MB6-671	1-C7	39
16102-MB6-672	1-C7	39
16102-MB6-881	1-C7	39
16103-MB6-671	1-C7	39
16103-MB6-672	1-C7	39
16103-MB6-881	1-C7	39
16104-MB6-671	1-C7	39
16104-MB6-672	1-C7	39
16104-MB6-881	1-C7	39
16107-MB4-671	1-C8	40
16107-ME9-671	1-C8	40
16111-MB6-601	1-C8	40
16111-MB6-881	1-C8	41
16112-MB6-881	1-C8	41
16131-MB0-701	1-C8	41
16131-MB4-671	1-C8	41
16141-MB4-671	1-C7	39
16143-MB6-881	1-C7	39
16151-MB0-771	1-C8	41
16151-MB6-881	1-C8	41
16165-MB0-771	1-C8	41
16165-MB6-781	1-C8	41
16178-MB0-671	1-C7	39
16188-MB6-601	1-C7	39
16188-MB6-881	1-C7	39
16199-MB4-621	1-C7	39
16199-MB6-881	1-C7	39
16212-MB6-000	1-B1	3
	1-B3	6
16212-MB6-010	1-B1	3
	1-B3	6
16214-MB0-000	1-B3	6
16219-MB0-770	1-B2	4
	1-B3	7
16700-MB6-005	1-E6	80
16711-MB6-000	1-E6	80
16712-MB6-000	1-E6	80
16900-371-004	1-E6	80
16950-MB2-013	1-E3	74
16952-MB2-000	1-E3	74
16952-MJ4-870	1-E3	74
16953-MB2-000	1-E3	74
16953-MB2-010	1-E3	74
16954-MB6-740	1-F11	114
16956-MB2-000	1-E6	80
16958-MB4-005	1-E3	74
16958-MB6-000	1-E6	80
16959-MB1-000	1-E6	80
16960-MB6-000	1-E6	80
16969-MB1-000	1-E6	80
17203-MG9-640	1-C7	39
17210-MB6-000	1-E7	82
17210-MB6-010	1-E7	82
17210-MB6-740	1-E7	82
17210-MB6-741	1-E7	82
17211-MB6-740	1-E7	82
17215-MB6-000	1-E7	82
17216-MB6-000	1-E7	82
17218-MB6-000	1-E7	82
17219-KB7-000	1-E7	82
17219-MB6-000	1-E7	82
17232-MB2-000	1-E7	82
17245-107-010	1-D1	46
	1-E5	78
17251-MB2-000	1-E7	82
17254-MB6-000	1-E7	82
17254-MB6-010	1-E7	82
17255-MB6-000	1-E7	82
17255-MB6-010	1-E7	82
17300-MB3-880	1-C7	39
17310-MB6-880	1-C7	39
17316-MB6-740	1-F11	114
17330-MB6-741	1-F11	114
17356-MB2-000	1-E7	82
17357-MB6-000	1-E7	82
17358-MB6-000	1-E7	83
17370-419-700	1-E7	83
17401-MB6-740	1-F11	114
17410-MB6-741	1-F11	114
17415-MB6-740	1-F11	114
17440-MB3-880	1-C7	39
17451-ME5-760	1-C7	39
175A1-MB6-670ZA	1-E3	74
175A1-MB6-740ZA	1-E3	74
17508-MB6-670ZA	1-F10	112
17516-MB6-000	1-E3	74
17517-MB6-000	1-E3	74
17523-MB6-740	1-E3	74
17524-MB6-740	1-E3	74
17525-MB6-740	1-E3	74
17526-MB6-740	1-E3	74
17527-MB6-740	1-E3	74
17528-MB6-740	1-E3	74
17529-MB6-740	1-E3	74
17533-MB6-740	1-E3	74
17551-MB6-000	1-E7	83
17552-MB6-000	1-E7	83
17554-MB4-000	1-E7	83
17554-MB6-000	1-E7	83
17611-028-000	1-F8	109
17613-MA5-771	1-E3	75
17620-MB2-000	1-E3	75
17620-MB2-013	1-E3	75
17620-MB2-023	1-E3	75
17620-MB2-881	1-E3	75
17908-MB6-000	1-D6	57
17910-MB6-000	1-D3	50
17910-MB6-010	1-D3	50
17910-MB6-020	1-D3	50
17920-MB6-000	1-D3	50
17920-MB6-010	1-D3	50
17920-MB6-020	1-D3	50
17950-MB6-000	1-D3	50
17962-KE8-700	1-D3	50
17962-KE8-701	1-D3	50
18231-MB4-000	1-E8	84
18291-MN4-920	1-C9	42
	1-E8	84
18291-236-000	1-C9	42
	1-E8	84
18300-MB6-003	1-E8	84
18300-MB6-630	1-E8	84
18316-MB6-003	1-E8	84
18330-MB6-003	1-E8	84
18370-MB6-003	1-E8	84
18373-MB6-003	1-E8	84
18374-MB6-003	1-E8	84
18376-MB2-003	1-E8	84
18377-MB2-003	1-E8	84
18391-MJ4-000	1-E8	84
18391-425-000	1-E8	84
18392-449-000	1-E8	84
18420-MB6-003	1-E8	84
18421-438-000	1-E8	84
18422-438-000	1-E8	84
18430-MB6-003	1-E8	84
19010-MB6-003	1-F5	102
19015-MB6-003	1-F5	102
19020-MB6-003	1-F5	102
19024-MB6-003	1-F5	102
19025-MB6-003	1-F5	102

PART NUMBER INDEX

PART NUMBER	GRID	PAGE
19030-MB6-003	1-F5	102
19031-HA7-671	1-F5	102
19032-MB2-000	1-F5	102
19033-MB6-003	1-F5	102
19035-MB6-003	1-F5	102
19035-ME9-003	1-F5	102
19038-ME9-000	1-F5	102
19041-MB6-003	1-F5	102
19044-MB6-003	1-F5	102
19045-MB0-013	1-F5	102
19050-MB6-003	1-F5	102
19051-KA4-000	1-F5	102
19051-MB2-000	1-F5	102
19052-MB0-000	1-F5	102
19053-MB2-000	1-D1	46
19101-MB6-000	1-F5	102
19102-MB6-000	1-F5	103
19103-463-000	1-E11	90
	1-F5	103
19104-MB0-700	1-F5	103
19107-MB6-000	1-F5	103
19110-MB6-000	1-F5	103
19111-MB6-000	1-F5	103
19115-MB6-000	1-F5	103
19116-MB6-000	1-F5	103
19117-MB6-000	1-F5	103
19118-MB6-000	1-F6	105
19119-MB6-000	1-F4	100
19120-MB6-000	1-F6	105
19125-MB6-000	1-F6	105
19127-MB6-000	1-F6	105
19140-MB6-000	1-F5	103
19140-MB6-630	1-F5	103
19141-MB6-000	1-F5	103
19200-MB6-000	1-B9	19
19200-MB6-020	1-B9	19
19201-MB6-000	1-F5	103
19221-MB6-000	1-B9	19
19226-MB6-000	1-B9	19
	1-C9	43
19300-MB0-003	1-C6	36
19311-MB6-000	1-C6	36
19315-MB6-000	1-C6	36
19502-MB6-000	1-C6	36
19504-MB6-000	1-C6	36
19506-KA4-000	1-F5	103
19507-MB6-000	1-C6	36
19508-MB6-000	1-C6	36
19509-MB6-000	1-C6	36
19512-MB6-003	1-C6	36
19514-ME9-000	1-C6	36
19516-MB6-000	1-C6	36
	1-F5	103
	1-F6	105
19517-MB6-000	1-C6	36
19520-MB2-000	1-C6	36
19526-MB6-000	1-C6	36
19530-MB6-000	1-C6	36
19534-MB6-000	1-C6	36
19536-MB6-000	1-C6	36

(2)	GRID	PAGE
22100-MB6-003	1-B6	13
22100-MB6-013	1-B6	13
22116-MB4-000	1-B6	13
22120-MB6-003	1-B6	13
22131-MB6-000	1-B6	13
22141-MB6-000	1-B6	13
22151-MB6-000	1-B6	13
22201-MB0-003	1-B6	13
22321-283-000	1-B6	13
22351-MB0-771	1-B6	13
22352-MB0-770	1-B6	13
22366-MB6-000	1-B6	13
22425-MB4-003	1-B6	13
22441-MB4-003	1-B6	13
22850-MB6-000	1-B6	13
22860-MB6-003	1-B9	19
22863-MG9-003	1-B9	19
22864-MB0-003	1-B9	19
22865-MG9-003	1-B9	19
22880-MB2-673	1-D5	54
22884-MB0-006	1-D5	54
22885-MB0-006	1-D5	54
22886-MB0-305	1-D5	54
22900-MB6-000	1-D5	54
23103-MB6-000	1-B6	13
23211-MB6-000	1-C4	32
23212-MB0-010	1-C4	32
23220-MB2-020	1-C4	32
23220-MB6-680	1-C4	32
23421-MB6-000	1-C4	32
23422-MB6-000	1-C4	32
23431-MB6-000	1-C4	32
23441-MB6-000	1-C4	32
23461-MB6-000	1-C4	32
23462-MB2-010	1-C4	32
23471-MB6-000	1-C4	32
23481-MB6-000	1-C4	32
23491-MB6-000	1-C4	32
23492-MB6-000	1-C4	32
23495-MB4-000	1-C4	32
23501-MB6-000	1-C4	32
23801-438-000	1-C4	32
23820-438-003	1-C4	32
23821-MB6-000	1-C4	33
24211-MB0-870	1-C5	34
24212-MB6-000	1-C5	34
24213-MB6-000	1-C5	34
24261-MB2-000	1-C5	34
24300-MB6-000	1-C5	34
24302-MB6-000	1-C5	34
24305-MB6-000	1-C5	34
24320-MB0-000	1-C5	34
24321-MB0-000	1-C5	34
24420-MB0-000	1-C5	34
24430-MB0-000	1-C5	34
24432-413-000	1-C5	34
24434-MB0-000	1-C5	34
24435-MB0-000	1-C5	34

	GRID	PAGE
24436-MB0-000	1-C5	34
24610-MB2-000	1-C5	34
24641-MB0-010	1-C5	34
24651-MB0-000	1-C5	34
24652-259-000	1-C5	34
24700-MB6-000	1-E9	86
24705-KE8-000	1-E9	86
24710-MB2-000	1-E9	86
24720-MB6-000	1-E9	86
24724-422-000	1-E9	86
28101-MB6-000	1-B7	15
28110-MB6-000	1-B7	15
28110-MB6-010	1-B7	15
28115-MB6-000	1-B7	15
28115-MB6-010	1-B7	15
28120-MB6-000	1-B7	15
28125-516-030	1-B7	15
28126-415-000	1-B7	15

(3)	GRID	PAGE
30300-MB0-154	1-B7	15
30300-MB0-174	1-B7	15
30301-MB0-000	1-B6	12
30301-MB6-000	1-B7	15
30310-MB0-154	1-B7	15
30320-MB0-154	1-B7	15
30400-MB4-005	1-F1	94
30400-MB6-004	1-F1	94
30410-MB6-004	1-F1	94
30410-MB6-005	1-F1	94
30501-428-003	1-F4	100
30502-428-003	1-F4	100
30503-428-003	1-F4	100
30510-MB0-701	1-F4	100
30515-MB6-003	1-F4	100
30516-MB6-003	1-F4	100
30731-MB6-000	1-F4	100
30732-MB2-000	1-F4	100
30733-MB2-153	1-F4	100
30734-MB2-153	1-F4	100
31100-MB6-000	1-B8	17
31100-MB6-008	1-B8	17
31100-MB6-014	1-B8	17
31110-MB6-000	1-B8	17
31110-MB6-004	1-B8	17
31110-MB6-008	1-B8	17
31120-MB6-000	1-B8	17
31120-MB6-004	1-B8	17
31120-MB6-008	1-B8	17
31120-MB6-014	1-B8	17
31130-MB6-000	1-B8	17
31200-MB6-008	1-B11	22
31201-MG9-004	1-B11	22
31204-292-158	1-B11	22
31205-MB6-000	1-B11	22
31206-402-008	1-B11	22
31500-MB6-671	1-E5	78
31500-MB6-672	1-E5	78

PART NUMBER INDEX

PART NUMBER	GRID	PAGE
31521-MB6-000	1-E5	78
31600-MB0-008	1-E6	80
31700-124-003	1-F4	100
31700-124-008	1-F4	100
32100-MB6-000	1-F4	100
32106-KE1-600	1-D3	50
32127-MB0-701	1-F4	100
32161-367-690	1-E7	83
32161-393-003	1-F4	100
32161-404-000	1-D3	50
32162-MB6-000	1-F4	100
32401-MB6-000	1-E5	78
32402-MB6-000	1-E5	78
32411-MB6-000	1-E5	78
32411-230-000	1-E5	78
32411-253-000	1-E5	78
32412-MB6-000	1-E5	78
32412-443-900	1-E5	78
32601-MB6-000	1-E5	78
32802-MB2-000	1-F4	100
32922-MB2-000	1-F6	105
33100-MB6-671	1-D1	46
33102-692-671	1-D1	46
33112-MM9-013	1-D1	46
33120-MB0-771	1-D1	46
33136-MB2-000	1-D1	46
33143-692-672	1-D1	46
33144-692-671	1-D1	46
33145-657-671	1-D1	46
33150-MB6-671	1-D1	46
33154-MB6-671	1-D1	46
33180-MC5-003	1-D1	46
33400-MB6-671	1-F2	96
33401-MB6-003	1-F2	96
33405-MB6-670	1-F2	96
33406-MB2-671	1-F2	96
33407-MB2-003	1-F2	96
33450-MB6-671	1-F2	96
33455-MB6-670	1-F2	96
33518-MB2-003	1-F2	96
33518-SA2-003	1-F3	98
33600-MB6-671	1-F2	96
33601-MB6-003	1-F2	96
33605-MB6-003	1-F2	96
33650-MB6-671	1-F2	96
33655-MB6-003	1-F2	96
33691-MB2-003	1-F2	96
33701-MB2-672	1-F3	98
33708-MB2-671	1-F3	98
33709-MB2-003	1-F3	98
33720-MB2-003	1-F3	98
33721-MB2-003	1-F3	98
33722-MB1-003	1-F3	98
33722-MB1-013	1-F3	98
33725-MB2-003	1-F3	98
33727-ME4-671	1-F3	98
33729-MB1-003	1-F3	98
33741-MB2-671	1-F5	103
33741-MC7-611	1-F1	94
33741-MC7-612	1-F1	94

	GRID	PAGE
33742-MB2-671	1-F3	98
33742-MB2-672	1-F3	98
33752-MB2-670	1-F5	103
33753-MB2-670	1-F5	103
34616-568-671	1-F3	98
34901-MC7-601	1-D1	46
34902-500-003	1-F3	98
34905-268-671	1-F2	96
34905-425-671	1-F2	96
34906-MG9-771	1-F3	98
34906-341-671	1-F3	99
34908-GA7-701	1-D2	48
34908-MB0-003	1-D2	48
34908-272-000	1-F3	98
34909-505-003	1-F3	98
34909-505-610	1-F3	98
35010-MB6-000	1-D6	57
35010-MB6-010	1-D6	57
35010-MB6-740	1-D6	57
35010-MB6-741	1-D6	57
35100-MB6-007	1-D6	57
35100-MB6-017	1-D6	57
35101-MB6-007	1-D6	57
35121-KW3-771	1-D6	57
35121-MA6-811	1-D6	57
35122-KW3-771	1-D6	57
35122-MA6-811	1-D6	57
35130-MB6-670	1-D3	50
35200-MB6-670	1-D3	50
35200-MB6-771	1-D3	50
35211-443-760	1-B6	12
35330-MB0-003	1-D5	54
35340-MA5-671	1-D4	52
35350-MB2-000	1-E9	86
35357-KE5-000	1-E9	86
35500-MB9-004	1-B12	25
35500-MJ0-004	1-B12	25
35500-MJ4-004	1-B12	25
35500-MJ4-014	1-B12	25
35550-MB2-771	1-F1	94
35550-MB2-772	1-F1	94
35610-MB2-003	1-B8	17
35753-MB2-000	1-B8	17
35753-MB2-010	1-B8	17
35850-MB0-007	1-E5	78
35852-MB0-007	1-E5	78
35856-MB0-007	1-E5	78
36100-MB1-701	1-E6	80
36101-MB1-000	1-E6	80
37100-MB6-671	1-D2	48
37102-MB6-008	1-D2	48
37102-567-009	1-D2	48
37103-MB6-008	1-D2	48
37104-MB6-008	1-D2	48
37120-MB6-008	1-D2	48
37200-MB6-671	1-D2	48
37210-MB6-008	1-D2	48
37237-SA5-003	1-D2	48
37237-SA5-004	1-D2	48
37240-PA6-004	1-B12	25

	GRID	PAGE
37240-657-013	1-B12	25
37250-MB6-008	1-D2	48
37300-MB6-008	1-D2	48
37305-KE5-008	1-D2	48
37400-MB6-008	1-D2	48
37612-MB6-008	1-D2	48
37750-PC1-004	1-C6	36
37760-MB6-013	1-F5	103
37800-MB6-000	1-E3	75
37800-MB6-010	1-E3	75
38110-MB6-671	1-F8	109
38111-MB6-000	1-F4	100
38200-MB6-005	1-D6	57
38205-MB6-003	1-D6	57
38210-MB2-000	1-D6	57
38301-MF8-772	1-E6	80
38301-MF8-773	1-E6	80
38306-KJ6-740	1-E6	80
38562-663-920	1-F11	114

(4)	GRID	PAGE
405A3-MB6-005	1-E11	90
40510-MB2-020	1-E11	90
40512-MB2-000	1-E11	90
40514-310-000	1-E11	90
40543-MB6-000	1-E2	72
41200-445-000	1-E2	72
41241-MA6-000	1-E2	72
42301-MB2-000	1-E2	72
42311-MB2-000	1-E2	72
42313-422-000	1-E2	72
42605-393-000	1-E2	72
42610-MJ0-000	1-E2	72
42620-MJ0-000	1-E2	72
42650-MB6-670	1-E2	72
42704-MB0-000	1-D11	66
	1-E2	72
42705-MB0-000	1-D11	66
	1-E2	72
42706-MB0-000	1-D11	66
	1-E2	72
42710-MB6-611	1-E2	72
42710-MB6-612	1-E2	72
42710-MB6-781	1-E2	72
42710-MB6-782	1-E2	72
42753-425-003	1-D11	66
	1-E2	72
42753-425-004	1-D11	66
	1-E2	72
43100-MB6-007	1-E1	70
43100-MB6-008	1-E1	70
43101-MB6-006	1-E1	70
43105-MB4-007	1-E1	70
43105-MB4-008	1-E1	70
43105-MB6-008	1-E1	70
43107-MA7-006	1-D10	64
	1-E1	70
43108-MB9-781	1-E1	70

PART NUMBER INDEX

PART NUMBER	GRID	PAGE
43110-MB6-006	1-E1	70
43112-445-631	1-E1	70
43310-MB2-013	1-D12	68
43351-MJ0-000	1-E2	73
43352-568-003	1-B9	19
	1-D10	64
	1-E1	70
43353-461-771	1-B9	19
	1-D10	64
	1-E1	70
43431-MB2-000	1-E1	70
43434-MA3-640	1-E1	70
43435-MC7-000	1-E1	70
43500-MB6-671	1-D12	68
43503-MB2-006	1-D12	68
43504-MB2-006	1-D12	68
43510-MB4-671	1-D12	68
43511-443-761	1-D12	68
43512-MB6-671	1-D12	68
43513-MB4-671	1-D12	68
43514-445-771	1-D12	68
43520-MB2-305	1-D12	68
43530-MB2-006	1-D12	68
44301-MJ1-670	1-D11	66
44311-410-000	1-D11	66
44311-425-870	1-D11	66
44620-MB0-000	1-D11	66
44650-MJ1-670	1-D11	66
44680-410-000	1-D11	66
44710-MB6-611	1-D11	66
44710-MB6-612	1-D11	66
44710-MB6-671	1-D11	66
44710-MB6-672	1-D11	66
44800-MB2-672	1-D11	66
44806-MB2-671	1-D11	66
44809-402-000	1-D11	66
44830-MB6-000	1-D2	48
44831-MB6-000	1-D2	48
44832-ME2-000	1-D10	64
45100-MJ0-017	1-D10	64
45101-MJ0-006	1-D10	64
45105-MB1-701	1-D10	64
45105-MB1-702	1-D10	64
45105-MJ1-672	1-D10	64
45105-MJ1-673	1-D10	64
45108-MA3-006	1-D10	64
45109-MA7-006	1-D10	64
	1-E1	71
45110-MJ0-016	1-D10	64
45111-MA3-006	1-D10	64
	1-E1	71
45112-445-631	1-D10	64
45124-MB6-003	1-D4	52
45125-MB6-003	1-D4	52
45126-MB6-671	1-D4	52
45127-MA1-003	1-D4	52
45128-ME2-003	1-D11	66
45131-MA3-006	1-D10	65
	1-E1	71
45133-MA3-006	1-D10	65

PART NUMBER	GRID	PAGE
45133-MA3-006	1-E1	71
45133-166-016	1-D10	65
	1-E1	71
45200-MJ0-017	1-D10	65
45200-MJ0-027	1-D10	65
45201-MJ0-006	1-D10	65
45209-MA7-006	1-D10	65
	1-E1	71
45210-MJ0-016	1-D10	65
45215-MA2-006	1-E1	71
45215-MA3-006	1-D10	65
45217-MJ0-006	1-D10	65
	1-E1	71
45251-MJ1-670	1-D11	67
45351-MJ1-670	1-D11	67
45500-MB4-673	1-D4	52
45504-410-003	1-D4	52
	1-D5	54
45512-MA6-006	1-D4	52
	1-D5	54
45517-MB0-006	1-D4	52
	1-D5	54
45518-MB4-671	1-D4	52
	1-D5	54
45520-MA5-671	1-D5	54
45520-MA5-672	1-D4	52
	1-D5	54
45520-300-000	1-D12	68
45521-MJ6-006	1-D12	68
45521-300-010	1-D12	68
45522-422-000	1-D4	52
	1-D5	54
45530-MA5-671	1-D4	52
45540-MB4-671	1-D4	52
	1-D5	54
46182-500-013	1-D12	68
46500-MB6-000	1-E9	86
46502-MB2-000	1-E9	86
46503-MB6-000	1-D12	68
46504-MB2-006	1-D12	68
46514-MB2-000	1-E9	86

(5)

PART NUMBER	GRID	PAGE
50100-MB6-000ZA	1-F6	105
50100-MB5-010ZA	1-F6	105
50100-MB6-740ZA	1-F6	105
50100-MB6-741ZA	1-F6	105
50200-MB6-000	1-F6	105
50208-MB2-000	1-F6	105
50209-MB6-000	1-F5	105
50210-MB6-000ZA	1-F6	105
50210-MB6-010ZA	1-F7	106
50210-MB6-740ZA	1-F7	106
50226-MB2-000	1-F7	106
50238-MB2-000	1-E5	78
50320-MB6-000	1-E5	78
50324-MB2-000	1-E5	78
50325-MB6-000	1-E6	80

PART NUMBER	GRID	PAGE
50327-MB6-000	1-E5	78
50329-MB2-000	1-E5	79
50356-MB6-000	1-F7	106
50361-MB2-000	1-F7	106
50362-MB0-000	1-F7	106
50362-MB2-000	1-F7	106
50500-MB6-000	1-E10	89
50522-MB2-000	1-E10	89
50526-MB6-000	1-E10	89
50540-MB6-000	1-E10	89
50541-MB0-000	1-E10	89
50548-356-700	1-E10	89
50549-356-700	1-E10	89
50574-ME5-610	1-E10	89
50610-MB6-000	1-E9	87
50610-MB6-010	1-E9	87
50617-MB2-000	1-E9	87
50618-KE8-000	1-E9	87
50620-MB6-000	1-E9	87
50620-MB6-010	1-E9	87
50630-MB6-000	1-E9	87
50631-MB6-000	1-E9	87
50632-MB2-000	1-E9	87
50632-MJ0-000	1-E9	87
50635-MB2-000	1-E9	87
50636-MB2-000	1-E9	87
50636-MB6-000	1-E9	87
50637-MB6-000	1-E9	87
50639-MB2-000	1-E9	87
50640-MB6-000	1-E9	87
50641-MB6-000	1-E9	87
50645-MB2-000	1-E9	87
50712-MB2-000	1-E9	87
51400-MB6-611	1-D8	60
51400-MB6-612	1-D8	60
51401-MB6-611	1-D8	60
51402-MB6-611	1-D8	60
51402-MB7-611	1-D8	60
51403-MB7-611	1-D8	60
51404-MB4-003	1-D8	60
51404-MB7-611	1-D8	60
51405-MB4-003	1-D8	60
51405-MB7-611	1-D8	60
51410-MB6-611	1-D8	60
51411-MG9-671	1-D8	60
51412-MB4-003	1-D8	60
51412-MB4-305	1-D8	60
51414-MB4-003	1-D8	60
51415-MB4-003	1-D8	60
51417-MJ0-003	1-D8	60
51417-MJ0-013	1-D8	60
51418-MJ0-003	1-D8	60
51419-MB4-003	1-D8	60
51421-MB6-611	1-D8	61
51423-MJ0-003	1-D8	61
51432-MB6-611	1-D8	61
51434-MC7-003	1-D8	61
51436-MJ0-003	1-D8	61
51437-MB4-003	1-D8	61
51438-MB4-003	1-D8	61

PART NUMBER INDEX

PART NUMBER	GRID	PAGE
51439-MB4-003	1-D8	61
51440-MB6-611	1-D8	61
51441-MJ0-003	1-D8	61
51442-MJ0-003	1-D8	61
51445-MJ0-003	1-D8	61
51447-MB4-003	1-D8	61
51450-MB6-611	1-D8	61
51454-MB6-611	1-D8	61
51456-MB2-003	1-D8	61
51456-469-013	1-D8	61
	1-E12	92
51458-MG5-611	1-D8	61
51480-MB1-731	1-F8	108
51490-MB4-305	1-D8	61
51490-MB4-315	1-D8	61
51496-MC7-670	1-D8	61
51500-MB6-611	1-D8	61
51500-MB6-612	1-D8	61
51500-MB6-613	1-D8	61
51510-MB6-611	1-D8	61
51521-MB6-611	1-D8	61
51530-MJ0-003	1-D8	61
51532-MB2-300	1-D8	61
51532-MB4-003	1-D8	61
51536-MB2-000	1-D10	65
51540-MB6-611	1-D8	61
51545-MJ0-003	1-D8	61
51558-MJ0-003	1-D8	61
51591-MJ0-305	1-D8	61
51634-MJ0-003	1-D8	61
52102-MA6-000	1-E11	90
52102-MB2-000	1-E11	90
52105-MB2-000	1-E11	90
52106-MB2-000	1-E11	90
52110-MB2-700	1-E11	90
52115-MB2-000	1-E1	71
52136-MA2-000	1-E11	90
52170-MB2-010	1-E11	90
52171-MB2-000	1-E11	90
52400-MB6-003	1-E12	92
52406-MA1-731	1-E12	92
52425-169-003	1-E12	92
52432-MB2-701	1-E12	92
52452-MA1-731	1-E12	92
52453-MB6-003	1-E12	92
52460-MB6-000	1-E12	92
52462-MB2-700	1-E12	92
52463-MB6-000	1-E12	92
52463-MC7-013	1-E12	92
52466-MB2-000	1-E12	92
52470-MB6-000	1-E12	92
52472-MC7-003	1-E12	92
52475-MJ0-000	1-E12	92
52476-MJ0-003	1-E12	92
52477-MC7-013	1-E12	92
52485-MA2-003	1-E12	92
52611-MB2-003	1-E12	92
52612-MA2-003	1-E12	92
52650-MB6-003	1-E12	93
53100-MB6-000	1-D6	57

PART NUMBER	GRID	PAGE
53137-MB6-003	1-D8	61
53141-422-000	1-D3	50
53150-MB6-000	1-D6	57
53165-422-000	1-D3	50
53166-422-000	1-D3	50
53175-KE8-006	1-D4	52
53175-MJ6-006	1-D4	52
53178-KE8-006	1-D5	54
53200-MB6-000	1-D7	58
53213-MB4-771	1-D7	58
53214-371-010	1-D7	58
53220-MB2-000	1-D7	58
53223-371-010	1-D7	58
53230-MB6-000	1-D6	57
55102-166-000	1-F5	103

(6)

PART NUMBER	GRID	PAGE
60108-MJ1-000	1-D7	59
60109-MJ1-000	1-D7	59
61100-MB2-000ZE	1-D7	59
61102-MB6-000	1-D8	61
61103-357-000	1-F3	99
61104-357-000	1-E3	75
	1-E5	79
61104-428-000	1-E3	75
	1-E5	79
61105-428-000	1-E3	75
	1-E5	79
61311-MB6-000	1-F8	109
61312-MB6-000	1-F4	100
61401-MB2-000	1-F7	106
61501-MB6-000	1-D1	46
61502-MB6-000	1-D1	46
641A0-MB6-670ZA	1-F8	109
641A0-MB6-671ZA	1-F8	109
641A1-MB6-670ZA	1-F8	109
641A1-MB6-671ZA	1-F8	109
641A5-MB6-000ZA	1-F8	109
64101-MB6-000	1-D2	48
64102-MA3-720	1-F8	109
64106-MB6-000	1-F8	109
64106-MB6-630	1-F8	109
64107-MB6-000	1-F9	110
64107-MB6-630	1-F9	110
64108-MB6-000	1-F9	110
64109-MB6-000	1-F9	110
64114-MB6-000	1-F9	110
64116-MB6-000	1-F9	110
64120-MB6-000	1-D2	49
64120-MB6-020	1-D2	49
64125-MB6-010	1-D2	49
64126-MB6-000	1-D2	49
642A4-MB6-000ZC	1-F9	110
64200-MB6-000	1-F9	110
64200-MB6-010	1-F9	110
64201-MB6-000	1-D2	49
64203-MB6-000	1-D7	58
64242-MB6-000	1-F9	110

PART NUMBER	GRID	PAGE
64242-MB6-300	1-F9	110
64243-MB6-000	1-F9	110
64243-MB6-300	1-F9	110
64245-MB6-300ZC	1-F10	112
64246-MB6-000	1-F9	110
64246-MB6-300	1-F9	110
64247-MB6-000	1-F9	110
64247-MB6-300	1-F9	110
64248-MB6-000	1-F9	110
64248-MB6-300	1-F9	111
64249-MB6-300	1-F9	111
66892-567-680	1-D7	59

(7)

PART NUMBER	GRID	PAGE
77100-MB6-670ZA	1-E4	76
77102-MB2-300	1-E4	76
772A0-MB6-000ZA	1-E4	76
77207-MB2-000	1-E4	76
77209-MB6-300ZA	1-F10	112
77211-MB0-000	1-E4	76
77211-MB2-000	1-E4	76
77220-MB2-003	1-E4	76
77225-ME4-003	1-E4	76
77228-MB6-300ZA	1-F10	112
77229-MB6-300ZA	1-F10	112
77302-124-000	1-E5	79
77330-MB2-000	1-E4	76
77331-MB2-000	1-E4	76
77332-MB2-000	1-E4	76
77333-MB2-000	1-E4	76
77334-MB2-000	1-E4	76
77335-MB2-000	1-E4	76
77340-MB2-000	1-E4	76

(8)

PART NUMBER	GRID	PAGE
80100-MB2-010	1-F1	94
80102-MB2-000	1-F1	94
80102-323-000	1-F3	99
80103-MB2-000	1-F3	99
80104-MB2-000	1-F3	99
80105-MB2-010	1-F1	94
83551-GE2-000	1-E5	79
	1-F1	94
83551-300-000	1-E5	79
836A0-MB6-670ZA	1-E5	79
83602-MB6-300	1-E5	79
83603-MB6-300	1-E5	79
83612-MB6-670ZA	1-F10	112
83613-MB6-670ZA	1-F10	112
83618-323-000	1-E5	79
83642-171-000	1-E4	76
837A0-MB6-670ZA	1-E5	79
84102-ME1-671	1-F1	94
84110-MB2-670	1-F1	94
84111-MB2-670	1-F1	94
84120-MB2-670	1-F1	94

PART NUMBER INDEX

PART NUMBER	GRID	PAGE
84121-MB2-670	1-F1	94
84610-MB6-000	1-F7	106
84701-MB6-670	1-F3	99
84703-MB2-670	1-F3	99
84703-425-000	1-E3	75
84706-163-670	1-F3	99
87115-MB6-670ZA	1-F10	112
87116-MB6-670ZA	1-F10	112
87117-MB6-670ZA	1-F10	112
87118-MB6-670ZA	1-F10	113
87505-MB6-670	1-E11	90
87506-MB6-300	1-E5	79
87507-MB4-670	1-F5	103
87507-MB6-670	1-E11	90
87508-415-670	1-E5	79
87511-323-670	1-F1	94
87512-MA4-670	1-F1	94
87515-MB6-670	1-F9	111
87517-MB0-770ZA	1-E3	75
87518-MB0-770	1-F7	106
87519-MB6-300	1-F7	106
87522-463-930	1-F9	111
87560-181-760	1-E3	75
87560-181-760ZD	1-E3	75
88110-MB6-000	1-D3	50
88110-MB6-010	1-D3	50
88120-MB6-000	1-D3	50
88120-MB6-010	1-D3	51
89010-MB2-730	1-F8	108
89101-300-010	1-F8	108
89103-371-000	1-F8	108
89216-MB2-000	1-F8	108
89221-371-000	1-F8	108
89221-429-000	1-F8	108
89222-371-000	1-F8	108
89227-461-000	1-F8	108
(9)		
90001-MB0-000	1-B2	4
	1-B3	7
90002-MB1-870	1-B4	9
90002-MB6-000	1-B12	25
90003-MB6-000	1-B2	4
	1-B3	7
90006-MB0-010	1-B2	4
	1-B3	7
90008-MB2-000	1-E5	79
90011-MB0-770	1-B2	4
	1-B3	7
90011-729-000	1-E5	79
90012-MB6-003	1-B2	4
	1-B3	7
90014-MB0-010	1-B12	25
90015-MB0-000	1-B12	25
90016-MB0-000	1-B12	25
90017-MB0-000	1-B1	2
90017-MB4-000	1-B7	15
	1-B8	17
90017-MB6-004	1-B1	2
90019-MB0-000	1-B11	23
90019-MB6-000	1-B12	25
90020-438-000	1-C4	33
90021-KE8-000	1-B11	23
90025-MB0-771	1-B2	4
90035-MB6-000	1-B2	4
	1-B3	7
90037-422-003	1-C4	33
90041-MB0-000	1-C5	35
90042-MB6-000	1-C6	36
90045-MB2-000	1-B2	4
90049-MB0-000	1-B9	19
90050-MB6-000	1-B6	13
90051-MB2-000	1-B9	19
90065-MB6-000	1-E9	86
90071-MB0-000	1-B11	22
90081-426-000	1-B5	11
90100-MB6-000	1-F7	106
90101-GG2-008	1-D2	49
90101-MB2-000	1-F7	106
90102-MB2-000	1-E3	75
90102-MB2-505	1-E3	75
90102-MB6-000	1-F9	111
90103-MB2-000	1-F7	106
90103-MB6-000	1-E8	84
90104-MB2-000	1-F7	106
90104-MB6-000	1-E8	85
90104-MJ1-000	1-D6	57
90105-MA6-000	1-D6	57
90105-MB0-000	1-E2	73
90105-MB0-010	1-E2	73
90105-MB2-000	1-F7	106
90105-MB6-000	1-E12	93
90105-ME2-000	1-D11	67
90105-MJ1-000	1-D10	65
90106-MB2-000	1-D8	61
90106-MB6-000	1-F7	107
90106-MF2-010	1-D11	67
90107-KE8-700	1-F9	111
90107-MB6-000	1-F7	107
90108-MB0-000	1-E10	89
90108-MB6-000	1-F7	107
90109-MB2-000	1-E9	87
	1-F7	107
90109-MB6-000	1-E10	88
90109-434-000	1-F1	95
90110-MB2-000	1-F7	107
90111-162-000	1-E6	80
90111-187-000	1-E4	76
90112-MB0-000	1-D6	57
90112-MB6-000	1-F9	111
90112-MC7-000	1-F9	111
90113-449-000	1-E6	80
90114-MA5-671	1-D4	52
	1-D5	54
90114-170-000	1-D1	46
90115-MB0-000	1-E10	89
90115-MB2-000	1-D12	68
90115-463-000	1-F1	95
90116-MJ0-003	1-D8	61
90116-125-782	1-E9	86
90116-283-010	1-D8	61
90116-391-670	1-E12	93
90117-MB0-000	1-D4	52
	1-D5	54
90119-438-000	1-E2	73
90120-MC7-000	1-E1	71
90121-MA3-640	1-E1	71
90121-MB2-000	1-E11	90
90122-MB2-000	1-E11	90
90125-MB2-003	1-D8	61
90131-MB2-000	1-D10	65
90141-MB0-000	1-E7	83
90142-MB0-000	1-E7	83
90145-KM3-750	1-D4	53
	1-D5	54
90145-MB0-010	1-D4	53
90145-961-010	1-D4	53
	1-D5	55
	1-D12	69
90150-MJ0-003	1-D8	61
90151-MB2-000	1-D6	57
90151-MJ0-003	1-D8	61
90152-MB0-000	1-D7	58
90152-MB2-000	1-E10	88
90153-MA1-000	1-E12	93
90162-692-003	1-D1	46
90162-692-013	1-D1	47
90166-MB2-000	1-D6	57
90167-SA0-980	1-F3	99
90176-422-000	1-E8	85
90180-MA3-006	1-D10	65
	1-E1	71
90180-MB6-000	1-D10	65
90182-MB2-003	1-E12	93
90189-MA2-003	1-E12	93
90201-700-000	1-E9	86
90202-KE8-700	1-F9	111
90203-MB6-000	1-B6	13
90203-MJ4-000	1-E10	89
90206-590-000	1-B4	9
90301-MB2-000	1-F1	95
90302-MB2-000	1-F3	99
90302-187-000	1-F1	95
	1-F3	99
90302-425-830	1-D7	58
90303-MB2-000	1-F7	107
90304-GA6-003	1-E12	93
90304-GE8-003	1-E12	93
90304-425-000	1-D6	57
90304-438-000	1-E8	85
90305-MB4-003	1-E2	73
90305-MJ1-670	1-D11	67
90309-KF0-003	1-E11	90
90309-375-003	1-E2	73
90309-428-731	1-E11	90
90311-GC3-000	1-F5	103
90311-MB6-003	1-F5	103

PART NUMBER INDEX

PART NUMBER	GRID	PAGE
90314-MB6-000	1-D3	51
90324-MB6-000	1-E3	75
90380-MB2-000	1-F2	97
90402-428-000	1-B4	9
90405-463-000	1-B5	11
90407-MB0-000	1-C5	35
90425-300-000	1-B9	19
90434-422-000	1-B7	14
90441-028-010	1-F7	107
90442-MB6-003	1-B12	25
90443-MB6-003	1-B12	25
90451-422-000	1-C4	33
90452-323-000	1-B2	4
	1-B3	7
90453-MB6-000	1-C4	33
90454-428-000	1-C4	33
90459-MB4-000	1-B7	14
90459-422-000	1-C4	33
90461-MB2-000	1-C4	33
90461-MJ0-000	1-B7	14
90461-357-000	1-B12	25
90462-MB2-000	1-C4	33
90462-MB6-000	1-B7	14
90485-KE8-000	1-B5	11
90485-MB2-000	1-E11	90
90485-286-000	1-B5	11
90486-MB0-000	1-B5	11
90487-MB0-000	1-C5	35
90488-MB0-000	1-B11	23
	1-C5	35
90489-MB0-000	1-C5	35
90501-MB6-003	1-F5	103
90501-310-000	1-D12	69
90503-425-000	1-D6	57
90506-425-830	1-D7	58
90510-107-720	1-B7	15
90511-MB2-000	1-D6	57
90511-MB6-003	1-F5	103
90522-170-700	1-E6	80
	1-F1	95
90525-001-000	1-B12	25
90541-MB0-000	1-B1	2
90542-MB0-000	1-B1	2
90543-273-000	1-D9	62
90544-283-000	1-D9	62
90545-300-000	1-B2	4
	1-C9	42
	1-D4	53
	1-D5	55
	1-D12	69
90550-MJ0-003	1-E12	93
90554-240-000	1-F9	111
90556-044-000	1-E11	91
90557-438-000	1-E8	85
90601-KA5-000	1-C3	31
90601-MB0-771	1-B7	14
90601-422-000	1-C4	33
90651-MA5-671	1-D4	53
90651-377-003	1-D5	55
90701-MB4-000	1-B11	23
90702-MB0-000	1-B7	15
90704-MB0-000	1-B5	11
90741-413-000	1-C3	31
90753-MG5-670	1-E2	73
91006-MB4-003	1-C4	33
91006-MB4-004	1-C4	33
91008-362-000	1-B7	14
91015-MB4-771	1-D7	58
91016-MB4-771	1-D7	58
91022-MB6-003	1-B7	15
91023-MB6-004	1-C4	33
91024-MB4-000	1-B7	14
91051-719-003	1-C5	35
91071-MB2-701	1-E11	91
91101-MB0-003	1-C5	35
91101-422-000	1-B8	16
91102-MB6-000	1-B2	4
	1-B3	7
91103-MB6-000	1-B8	16
91203-148-003	1-E11	91
91204-MB0-003	1-B9	19
91204-MB0-013	1-B9	19
91204-425-003	1-C1	26
91206-MB2-000	1-B10	20
91206-MB2-003	1-B10	20
91206-MB2-004	1-B10	20
91207-MB2-003	1-B10	20
91207-MB2-004	1-B10	20
91209-MB0-003	1-B10	20
91210-MB0-003	1-C1	26
91210-MB0-013	1-C1	26
91212-422-006	1-D12	69
91213-MB2-003	1-E11	91
91213-MB2-006	1-E11	91
91214-MA6-003	1-E11	91
91214-MA6-006	1-E11	91
91252-MC7-003	1-D11	67
91253-442-003	1-E2	73
91254-MA1-731	1-E12	93
91254-MB4-003	1-D9	62
91257-MC7-003	1-E12	93
91258-410-013	1-D11	67
91262-MB2-005	1-E12	93
91301-MB0-000	1-C6	37
	1-C9	43
91301-MB6-003	1-C6	37
	1-C9	43
91301-027-000	1-D2	49
91301-469-003	1-D9	62
	1-E12	93
91302-MA6-003	1-E2	73
91302-MB0-013	1-B10	20
	1-C9	43
91302-371-013	1-C6	37
	1-C9	43
91302-371-023	1-C6	37
	1-C9	43
91303-MB2-003	1-B10	20
	1-C9	43
91303-MB2-004	1-B10	20
91303-MB2-004	1-C9	43
91303-MG7-003	1-F7	107
91303-377-000	1-F7	107
91303-426-000	1-F7	107
91304-MJ0-003	1-D9	62
91305-MC7-000	1-E3	75
91305-323-000	1-D9	62
	1-E12	93
91305-422-000	1-C4	33
	1-C9	43
91306-PJ4-000	1-D2	49
91307-MB0-003	1-C6	37
	1-C9	43
91307-PH7-660	1-F5	103
91307-425-003	1-B6	12
	1-C9	43
91307-611-000	1-F5	103
91308-MB0-003	1-B10	20
	1-C9	43
91308-MC7-003	1-D10	65
91308-MJ0-003	1-D9	62
91308-283-000	1-B12	24
	1-C10	44
91309-MA6-000	1-B11	22
91309-MB0-003	1-B11	23
	1-C9	43
91310-KE8-003	1-B4	9
	1-C9	42
91310-MC7-003	1-D2	49
91310-MJ0-003	1-D9	62
91311-MB0-003	1-B11	23
	1-C9	43
91311-MJ0-003	1-D9	62
91311-PH7-003	1-D10	65
91313-MB0-003	1-B11	23
	1-C10	44
91313-MG7-004	1-B11	23
	1-C10	44
91313-393-003	1-B12	24
	1-C10	44
91314-MB0-003	1-C1	26
	1-C10	44
91315-MB6-000	1-C6	37
91315-MB6-003	1-C6	37
91318-ME5-003	1-D9	62
	1-E12	93
91320-MB0-000	1-B11	22
91335-567-000	1-C6	37
91352-MB4-003	1-D9	62
91353-MB4-003	1-D9	62
91356-MB4-003	1-D9	62
92000-06008-0A	1-D9	62
92000-06012	1-E10	88
92000-06012-0A	1-E10	88
92100-06012	1-E10	88
92101-06008-0A	1-D9	62
92101-06012	1-E10	88
92700-08050-3B	1-D9	62
92716-12050-0E	1-E2	73
92800-12000	1-B12	24

PART NUMBER INDEX

PART NUMBER	GRID	PAGE
92900-08028-3B	1-D9	62
93401-06025-00	1-B8	16
93491-06025-00	1-B8	16
93493-06010-07	1-F5	103
93500-04006-0G	1-F5	103
93500-04008-1H	1-E5	79
93500-04008-1G	1-E12	93
93500-04010-0A	1-C8	41
93500-04010-0H	1-B8	16
93500-04012-0A	1-C8	41
93500-04020-0H	1-F5	103
93500-05008-0G	1-B2	4
	1-B3	7
93500-05012-0H	1-E11	91
93500-05016-0G	1-D6	57
93500-05025-0G	1-B2	4
	1-B3	7
93500-05035-0G	1-D6	57
93500-06008-4J	1-E8	85
93500-06012-0A	1-B8	17
93500-06025-0H	1-F1	95
93600-04012-1G	1-D4	53
	1-D5	55
93600-06016-0A	1-C4	33
	1-C5	35
93600-06035-0G	1-D6	57
93700-04012-1G	1-F2	97
93700-05020-0G	1-D2	49
93891-04008-08	1-E4	76
93891-04010-07	1-F5	103
93891-04010-08	1-F5	103
93891-05012-0A	1-F7	107
93892-04006-00	1-E3	75
93892-04010-00	1-C7	39
93892-04014-00	1-C7	39
93892-04016-00	1-C8	41
93892-05008-08	1-C7	39
93892-05012-00	1-C7	39
93892-05020-07	1-D3	51
93892-05028-07	1-D3	51
93892-05045-07	1-D3	51
93893-04012-17	1-D4	53
	1-D5	55
93893-04012-18	1-D12	69
93893-05012-07	1-F5	103
93894-05025-17	1-E11	91
93901-22020	1-F9	111
93901-34220	1-E5	79
93901-35100	1-E7	83
93903-24220	1-E7	83
93903-34180	1-F9	111
93903-44380	1-F7	107
93903-44480	1-D2	49
94001-04080-0S	1-F9	111
94001-10000-0S	1-C2	73
94002-06000-0S	1-E5	79
94002-06020-0S	1-E9	86
94002-06200	1-C5	35
94002-08000-0S	1-D12	69
94021-06000-0S	1-E5	79
94021-06000-0S	1-E6	81
94021-06020	1-E5	79
	1-E6	81
94021-06020-0S	1-E5	79
	1-E6	81
94022-06020	1-E5	79
	1-E6	81
94030-08070	1-D9	62
94050-05000	1-F5	103
94050-06000	1-D1	47
	1-D4	53
	1-D5	55
	1-E8	85
94050-06080	1-D2	49
	1-E3	75
	1-E10	89
	1-F2	97
94050-10000	1-E8	85
	1-F7	107
94101-04800	1-E5	79
94101-06000	1-C6	37
94101-06080	1-C6	37
94101-06800	1-C6	37
	1-E5	79
	1-E8	85
94101-08700	1-D9	62
94102-08000	1-E10	88
94103-04800	1-F9	111
94103-06000	1-F2	97
94109-12000	1-B12	24
	1-C10	44
94111-04800	1-B8	16
94111-05000	1-B11	22
94111-06000	1-E8	85
94111-06800	1-E5	79
94111-08700	1-D9	62
94201-16080	1-E12	93
94201-16150	1-D12	69
	1-E10	88
94201-16250	1-D12	69
	1-E10	88
94201-20180	1-E1	71
94201-20200	1-E1	71
94201-20220	1-E1	71
94201-20250	1-B12	24
	1-E1	71
94201-20320	1-B12	24
	1-E1	71
94201-20350	1-B12	24
	1-E1	71
94201-25250	1-E10	89
94201-25300	1-E10	89
94201-29220	1-E1	71
94251-06000	1-B5	11
94251-08000	1-B5	11
94251-10000	1-E1	71
94301-08140	1-B2	4
	1-B3	7
	1-B6	12
	1-B10	20
94301-08140	1-B12	24
	1-C1	26
94301-12200	1-B2	4
	1-B3	7
	1-C1	26
94303-10160	1-C1	26
94520-40000	1-E11	91
94520-62000	1-E2	73
94601-15000	1-B7	14
95001-35170-40	1-C7	39
95001-45080-40	1-C7	39
95001-45180-40	1-C7	39
95001-55280-20	1-E6	81
95002-01120	1-E6	81
95002-02070	1-C7	39
	1-F11	114
95002-02080	1-C7	39
	1-F11	114
95002-02100	1-C7	39
	1-E6	81
95002-02120	1-C7	39
95002-02130	1-F11	114
95002-41050-08	1-E6	81
	1-E7	83
95002-50000	1-F11	114
95002-70000	1-E6	81
	1-F5	103
	1-F11	114
95003-45002-10	1-E9	86
95003-55007-10	1-E10	89
95005-35250-20	1-F11	114
95005-35570-20	1-F11	114
95005-55680-20	1-F11	114
95005-70600-30	1-F5	103
95005-70700-30	1-F5	103
95011-61000	1-E8	85
95014-61200	1-F4	101
95700-06010-00	1-B10	20
95700-06010-07	1-D10	65
	1-E1	71
	1-F9	111
95700-06010-08	1-D1	47
	1-E7	83
	1-F1	95
95700-06012-00	1-C1	26
	1-E1	71
	1-E6	81
95700-06012-08	1-F4	101
	1-F9	111
95700-06014-00	1-D12	69
	1-F3	99
95700-06014-08	1-F4	101
95700-06016-00	1-B5	11
95700-06016-07	1-F4	101
95700-06016-08	1-E4	77
95700-06018-07	1-E11	91
95700-06020-00	1-E9	86
95700-06020-07	1-F11	114
95700-06022-00	1-F5	103
95700-06025-07	1-D4	53
	1-F5	103
95700-06025-08	1-E4	77
95700-06028-00	1-C1	26
95700-06032-00	1-C1	26
95700-06040-08	1-E6	81
	1-E10	89
95700-06045-00	1-B12	24
	1-C1	26
95700-06050-07	1-C1	26
95700-06055-00	1-C1	26
95700-06060-00	1-C1	26
95700-06070-00	1-B12	24
95700-06090-00	1-C1	27
95700-06100-07	1-C1	27
95700-08016-00	1-F5	103
95700-08016-07	1-F9	111
95700-08016-08	1-B8	16
95700-08020-00	1-B10	20
95700-08020-07	1-E4	77
95700-08025-08	1-E3	75
95700-08028-08	1-C4	33
95700-08032-07	1-E8	85
95700-08035-00	1-E8	85
95700-08035-07	1-E8	85
95700-08035-08	1-B10	20
95700-08045-00	1-C1	27
95700-08050-00	1-C1	27
95700-08068-08	1-B10	20
95700-08070-08	1-B10	20
95700-08080-00	1-C1	27
95700-10032-00	1-E10	88
95701-06010-00	1-B10	20
95701-06010-07	1-D10	65
	1-E1	71
	1-F9	111
95701-06010-08	1-D1	47
	1-E7	83
	1-F1	95
95701-06012-00	1-C1	26
	1-E1	71
	1-E6	81
95701-06012-08	1-F4	101
	1-F9	111
95701-06014-00	1-D12	69
	1-F3	99
95701-06014-08	1-F4	101
95701-06016-00	1-B5	11
95701-06016-07	1-F4	101
95701-06016-08	1-E4	77
95701-06018-07	1-E11	91
95701-06020-00	1-E9	86
95701-06020-07	1-F11	114
95701-06022-00	1-F5	103
95701-06025-07	1-D4	53
	1-F5	103
95701-06025-08	1-E4	77
95701-06028-00	1-C1	26
95701-06032-00	1-C1	26
95701-06040-08	1-E6	81
	1-E10	89
95701-06045-00	1-B12	24
	1-C1	26
95701-06045-07	1-B12	24
	1-C1	26
95701-06055-00	1-C1	26
95701-06060-00	1-C1	26
95701-06070-00	1-B12	24
95701-06090-00	1-C1	27
95701-08016-00	1-F6	104
95701-08016-07	1-F9	111
95701-08016-08	1-B8	16
95701-08020-00	1-B10	20
95701-08025-08	1-E3	75
95701-08032-07	1-E8	85
95701-08035-00	1-E8	85
95701-08035-08	1-B10	20
95701-08045-00	1-C1	27
95701-08050-00	1-C1	27
95800-08032-00	1-C5	35
95900-06016-08	1-E4	77
95900-08016-08	1-B8	16
95900-08016-08	1-B8	16
95900-08065-00	1-E11	91
96000-06010-00	1-F7	107
96000-06012-00	1-B1	2
	1-B9	18
96000-06012-07	1-F9	111
96000-06014-00	1-B5	11
	1-C6	37
96000-06014-02	1-D7	59
96000-06014-07	1-B2	4
96000-06016-00	1-C4	33
	1-C5	35
	1-C6	37
	1-E3	75
96000-06018-07	1-B9	18
96000-06020-00	1-B9	18
96000-06020-02	1-E3	75
96000-06022-07	1-C6	37
96000-06025-00	1-B11	22
96000-06025-07	1-B10	20
96000-06028-00	1-B10	21
96000-06028-07	1-B6	12
	1-B12	24
96000-06032-07	1-B6	12
	1-B10	21
96000-06035-00	1-B9	18
96000-06035-07	1-B6	12
	1-B9	18
	1-B10	21
	1-C6	37
96000-06040-00	1-B10	21
96000-06040-07	1-C6	37
96000-06045-00	1-B10	21
96000-06060-07	1-B10	21
96000-06070-07	1-B10	21
96001-06010-00	1-F7	107
96001-06012-00	1-B1	2
	1-B9	18
96001-06012-07	1-F9	111
96001-06014-00	1-B5	11
96001-06014-00	1-C6	37
96001-06014-07	1-B2	4
96001-06016-00	1-C4	33
	1-C5	35
	1-C6	37
	1-E3	75
96001-06018-07	1-B9	18
96001-06020-00	1-B9	18
96001-06020-02	1-E3	75
96001-06022-07	1-C6	37
96001-06025-00	1-B11	22
96001-06028-00	1-B10	21
96001-06028-07	1-B6	12
	1-B12	24
96001-06032-07	1-B6	12
	1-B10	21
96001-06035-00	1-B9	18
96001-06035-07	1-B6	12
	1-B9	18
	1-B10	21
	1-C6	37
96001-06040-00	1-B10	21
96001-06040-07	1-C6	37
96001-06045-00	1-B10	21
96001-06060-07	1-B10	21
96001-06070-07	1-B10	21
96100-62030-10	1-E11	91
96100-63040-00	1-C1	27
96140-63020-10	1-D11	67
96140-63050-10	1-E2	73
96150-62040-10	1-E2	73
96150-63020-10	1-D11	67
96150-63040-10	1-E2	73
96211-05000	1-D9	63
96500-08016-08	1-B8	16
98069-57916	1-B2	4
	1-B3	7
98069-57926	1-B2	4
	1-B3	7
98069-58916	1-B2	5
	1-B3	7
98069-58926	1-B2	5
	1-B3	7
98069-59916	1-B2	5
	1-B3	7
98069-59926	1-B2	5
	1-B3	7
98200-11000	1-D6	57
98200-11500	1-D6	57
98200-53000	1-E5	79
99001-08000	1-F8	108
99001-10120	1-F8	108
99001-14170	1-F8	108
99002-13500	1-F8	108
99003-10000	1-F8	108
99003-30000	1-F8	108
99003-50000	1-F8	108
99006-12000	1-F8	108
99006-22000	1-F8	108
99006-27000	1-F8	108

PART NUMBER INDEX

PART NUMBER	GRID	PAGE	PART NUMBER	GRID	PAGE	PART NUMBER	GRID	PAGE
99008-02000	1-F8	108						
99101-393-1100	1-C8	41						
99101-393-1120	1-C8	41						
99101-393-1150	1-C8	41						
99101-393-1450	1-C8	41						
99101-393-1500	1-C8	41						
99102-393-1100	1-C8	41						
99102-393-1150	1-C8	41						
99102-393-1450	1-C8	41						
99103-437-0380	1-C8	41						

PART NUMBER INDEX

PART NUMBER	GRID	PAGE	PART NUMBER	GRID	PAGE	PART NUMBER	GRID	PAGE

DESCRIPTION INDEX

DESCRIPTION	GRID	PAGE	REF.
(A)			
ADJUSTER, DRIVE CHAIN	1-E2	72	1
ALTERNATOR ASSY	1-B8	17	5
ARM ASSY, SHOCK	1-E12	92	13
ARM COMP, CAM CHAIN TENSIONER	1-B5	11	15
ARM COMP, GEARSHIFT PEDAL	1-E9	86	3
ARM COMP, NEUTRAL STOPPER	1-C5	34	10
ARM COMP, SHIFT DRUM STOPPER	1-C5	34	11
ARM, RR BRAKE MIDDLE	1-E9	86	9
ARM, VALVE ROCKER	1-B4	8	6
AXLE, FR WHEEL	1-D11	66	3
AXLE, RR WHEEL	1-E2	72	4
(B)			
BAG, OWNERS MANUAL	1-E4	76	16
BAG, TOOL	1-F8	108	3
BALL, STEEL #5	1-D9	63	73
BAND, A2 WIRE	1-F4	101	20
BAND, B1 CABLE	1-D3	50	6
BAND, BOOT	1-E12	92	20
BAND, INSULATOR	1-B2	4	9
	1-B3	7	9
BAND, L EX PIPE	1-E8	84	8
BAND, L MUFFLER	1-E8	84	10
BAND, R EX PIPE	1-E8	84	7
BAND, R MUFFLER	1-E8	84	9
BAND, WIRE	1-E7	83	20
BAR ASSY, L MAIN STEP	1-E9	87	14
BAR ASSY, R MAIN STEP	1-E9	87	5
BAR ASSY, SIDE STAND	1-E10	89	4
BAR COMP, L STEP	1-E9	87	16
BAR COMP, R STEP	1-E9	87	9
BAR, SEAT LOCK	1-E4	76	2
BASE COMP	1-F3	98	6
BASE COMP, CONTACT	1-D6	57	4
BASE, AIR CLEANER	1-C7	39	24
BASE, FUEL VALVE	1-E3	74	3
BASE, L REFLECTOR	1-F1	94	13
BASE, L TURN SIGNAL	1-F2	96	10
BASE, LICENSE LIGHT	1-F3	99	19
BASE, R REFLECTOR	1-F1	94	11
BASE, R TURN SIGNAL	1-F2	96	2
BASE, REFLEX REFLECTOR	1-F5	103	36
BATTERY ASSY	1-E5	78	2
BEARING A, CONNECTING ROD	1-C2	29	8
BEARING A, CRANKSHAFT	1-C3	31	10
BEARING B, CONNECTING ROD	1-C2	29	8
BEARING B, CRANKSHAFT	1-C3	31	10
BEARING C, CONNECTING ROD	1-C2	29	8
BEARING C, CRANKSHAFT	1-C3	31	10
BEARING, HEAD PIPE LOWER	1-D7	58	11
BEARING, HEAD PIPE UPPER	1-D7	58	10
BEARING, NEEDLE 22MM	1-C4	33	29
BEARING, NEEDLE 30X35X20	1-B7	15	15
BEARING, NEEDLE 40X47X31	1-B7	14	25
BEARING, RADIAL BALL 16003	1-B7	14	24
BEARING, RADIAL BALL 6203	1-E11	91	30
BEARING, RADIAL BALL 6204	1-E2	73	26
BEARING, RADIAL BALL 6206	1-C4	33	28
BEARING, RADIAL BALL 6302U	1-D11	67	19
BEARING, RADIAL BALL 6302UU	1-D11	67	19
BEARING, RADIAL BALL 6304	1-C1	27	30
BEARING, RADIAL BALL 6304UU	1-E2	73	27
BEARING, RADIAL BALL 6305U	1-E2	73	25
BEARING, SWINGARM PIVOT	1-E11	91	21
BEARING 16005	1-C5	35	25
BLOCK SET, CYLINDER	1-B12	25	1
BODY COMP, FRAME	1-F6	105	7
BODY, R FR CALIPER	1-D10	65	17
BOOT B	1-D10	65	14
	1-E1	71	16
BOOT COMP	1-D4	52	7
	1-D5	54	7
	1-D12	68	4
BOOT COMP, RR SHOCK	1-E12	92	19
BOOT, MASTER CYLINDER	1-D4	52	13
	1-D5	54	13
BOOT, PIN	1-D10	65	15
	1-E1	71	17
BOOT, PISTON CASE	1-D8	61	28
BOSS, OIL FILTER	1-B11	23	12
BOX ASSY, SPEEDOMETER GEAR	1-D11	66	9
BOX COMP, BATTERY	1-E5	78	15
BRACKET ASSY, CAM CHAIN TENSIONER	1-B5	10	3
BRACKET COMP, CAM CHAIN TENSIONER HOLDER	1-B5	11	16
BRACKET COMP, L FR	1-D10	64	10
BRACKET COMP, R FR	1-D10	65	19
BRACKET COMP, RR	1-E1	70	6
BRACKET, COUPLER	1-F4	100	19
BRACKET, GRILLE	1-F5	102	8
BRACKET, L STEP	1-E9	87	15
BRACKET, NUMBER PLATE	1-F3	99	18
BRACKET, R STEP	1-E9	87	6
BRACKET, REFLEX REFLECTOR	1-F5	103	37
BRACKET, SIDE STAND RUBBER	1-E10	89	8
BRIDGE, FORK TOP	1-D6	57	11
BRUSH, CARBON	1-B11	22	2
BULB, HEADLIGHT	1-D1	46	13
BULB, LICENSE LIGHT	1-F3	98	12
BULB, STOP & TAILLIGHT	1-F3	98	13
BULB, TAILLIGHT	1-F3	99	13
BULB, TURN SIGNAL	1-F2	96	15
	1-F2	96	16
BULB, WEDGE BASE	1-D2	48	1
	1-D2	48	2
BUSH B, SLIDER	1-D8	60	15
BUSH, DAMPER	1-E12	92	18
BUSH, GUIDE	1-D8	60	13
BUSH, PIVOT	1-D8	61	42
BUSH, RUBBER	1-D8	61	45
BUSH, SLIDER	1-D8	60	14
BUSHING	1-D5	54	3

DESCRIPTION INDEX

DESCRIPTION	GRID	PAGE	REF.
(C)			
CABLE ASSY, SPEEDOMETER	1-D2	48	15
CABLE COMP, A THROTTLE	1-D3	50	1
CABLE COMP, B THROTTLE	1-D3	50	2
CABLE COMP, CHOKE	1-D3	50	3
CABLE COMP, CONTROL	1-E12	93	21
CABLE, BATTERY EARTH	1-E5	78	10
CABLE, BATTERY STARTER	1-E5	78	4
CABLE, INNER	1-D2	48	16
CABLE, STARTER MOTOR	1-E5	78	5
CALIPER ASSY, L FR	1-D10	64	5
CALIPER ASSY, R FR	1-D10	65	16
CALIPER ASSY, RR	1-E1	70	1
CALIPER COMP, L FR	1-D10	64	6
CALIPER COMP, RR	1-E1	70	2
CAMSHAFT COMP, FR EX	1-B4	8	4
CAMSHAFT COMP, FR IN	1-B4	8	2
CAMSHAFT COMP, RR EX	1-B4	8	5
CAMSHAFT COMP, RR IN	1-B4	8	3
CANISTER COMP	1-F11	114	6
CAP	1-E12	92	3
CAP A, CONNECTING PIPE	1-C6	36	7
CAP B, CONNECTING PIPE	1-C6	36	8
CAP COMP 1, COIL WIRE	1-F4	100	8
CAP COMP 2, COIL WIRE	1-F4	100	9
CAP COMP 3, COIL WIRE	1-F4	100	10
CAP COMP 4, COIL WIRE	1-F4	100	11
CAP COMP, FUEL FILLER	1-E3	75	17
CAP COMP, OIL CUP	1-D12	68	7
CAP COMP, RADIATOR	1-F5	102	14
CAP, ADJUSTING PLATE	1-D8	61	35
CAP, AIR VALVE	1-D8	61	33
	1-E12	92	4
CAP, BLEEDER	1-B9	19	14
	1-D10	64	3
	1-E1	70	9
CAP, ENGINE HANGER	1-F6	105	8
CAP, MAIN GALLERY	1-B12	25	2
CAP, MASTER CYLINDER	1-D4	52	9
	1-D5	54	9
CAP, RESERVE TANK	1-F5	103	22
CAP, SCREW	1-F4	100	2
CAP, STARTER CLUTCH ROLLER SPRING	1-B7	15	7
CARBURETOR ASSY	1-C7	38	16
	1-C7	39	16
CARBURETOR ASSY 1	1-C7	39	17
CARBURETOR ASSY 2	1-C7	39	18
CARBURETOR ASSY 3	1-C7	39	19
CARBURETOR ASSY 4	1-C7	39	20
CASE ASSY, L LOWER	1-D8	61	40
CASE COMP, METER	1-D2	48	7
CASE COMP, PISTON	1-D8	61	41
CASE COMP, R LOWER	1-D8	61	18
CASE, AIR CLEANER	1-E7	82	1
CASE, DRIVE CHAIN	1-E11	90	3
CASE, FUSE	1-D6	57	7
CASE, GUIDE	1-E12	92	14
CASE, THERMOSTAT	1-C6	36	2
CENTER A, CLUTCH	1-B6	13	4
CENTER B, CLUTCH	1-B6	13	5
CHAIN SET, DRIVE	1-E11	90	2
CHAIN, CAM	1-B5	10	2
CHAIN, OIL PUMP	1-B11	23	8
CHAMBER COMP, EX	1-E8	84	3
CHAMBER SET, FLOAT	1-C8	40	4
CIRCLIP	1-D4	53	21
	1-D12	68	13
CIRCLIP, INTERNAL	1-D8	61	30
CIRCLIP, INTERNAL 18MM	1-D5	55	19
CIRCLIP, INTERNAL 40MM	1-E11	91	27
CIRCLIP, INTERNAL 62MM	1-E2	73	24
CIRCLIP, INTERNAL 95	1-B7	14	23
CIRCLIP, 28MM	1-C4	33	27
CLAMP A, WATER HOSE	1-C6	36	11
	1-F5	103	33
	1-F6	105	5
CLAMP B, RR BRAKE HOSE	1-E1	71	21
CLAMP B, WATER HOSE	1-C6	36	12
CLAMP, ALTERNATOR WIRE	1-B8	17	8
CLAMP, BREATHER HOSE	1-B1	2	5
CLAMP, COIL WIRE	1-F4	100	17
CLAMP, L FR BRAKE HOSE	1-D7	59	2
CLAMP, MASTER CYLINDER OIL HOSE	1-D12	68	8
CLAMP, PULSER WIRE	1-B6	12	4
CLAMP, R FR BRAKE HOSE	1-D7	59	1
CLAMP, RESERVE TANK TUBE	1-F4	100	1
CLAMP, SPEEDOMETER CABLE	1-D10	64	4
CLAMP, SWITCH WIRE	1-B6	12	5
CLAMP, WATER HOSE	1-C6	36	10
	1-F5	103	32
CLAMP, WATER PIPE	1-C6	36	16
CLAMP, WIRE	1-F6	105	6
CLAMP, WIRE HARNESS	1-F4	100	16
CLIP A12, TUBE	1-E6	81	21
CLIP B10, TUBE	1-C7	39	41
	1-E6	81	22
CLIP B12.5, TUBE	1-F11	114	11
CLIP B12, TUBE	1-C7	39	42
CLIP B7, TUBE	1-C7	39	39
	1-F11	114	9
CLIP B8, TUBE	1-C7	39	40
	1-F11	114	10
CLIP C11, TUBE	1-E6	81	24
	1-F5	103	51
	1-F11	114	13
CLIP D10.5, TUBE	1-E6	81	23
	1-E7	83	25
CLIP, BREATHER TUBE	1-E7	83	18
	1-E7	83	19
CLIP, FUEL HOSE	1-E6	80	9
CLIP, HARNESS	1-F4	100	14
CLIP, OIL DRAIN TUBE	1-F11	114	1
CLIP, PISTON PIN 15MM	1-B7	14	26
CLIP, PISTON PIN, 1.2X20	1-C3	31	11
CLIP, PULSER CORD	1-B7	15	9
CLIP, SCREEN MOULDING	1-F8	109	7
CLIP, SPEEDOMETER CABLE	1-D7	58	6

DESCRIPTION INDEX

DESCRIPTION	GRID	PAGE	REF.
CLIP, TUBE, 50MM	1-F11	114	12
CLIP, WIRE HARNESS	1-F4	100	15
CLUTCH, ONE WAY	1-B6	13	13
COIL COMP., IGNITION	1-F4	100	5
COLLAR B, ENGINE HANGER	1-F7	106	15
COLLAR COMP., FR. AXLE DISTANCE	1-D11	66	5
COLLAR, BUSH	1-E12	92	7
COLLAR, CHAIN CASE	1-E11	90	4
	1-E11	90	5
COLLAR, CHAIN SLIDER	1-E11	90	8
COLLAR, CONNECTING ROD	1-E12	92	15
COLLAR, CONNECTING ROD LOWER	1-E12	92	10
COLLAR, ENGINE HANGER UPPER	1-F7	106	14
COLLAR, FR. FENDER	1-E3	75	19
	1-E5	79	19
COLLAR, FR. WHEEL SIDE	1-D11	66	4
COLLAR, FUEL TANK SETTING	1-E3	75	24
COLLAR, GEARSHIFT DRUM STOPPER	1-C5	34	12
COLLAR, GEARSHIFT LEVER MOUNT	1-E6	80	18
	1-F1	95	20
COLLAR, HOOD SETTING	1-D2	49	20
COLLAR, L. ENGINE HANGER UPPER	1-F6	105	9
COLLAR, LINK	1-E1	70	12
COLLAR, MOUNTING	1-F5	102	13
COLLAR, MUFFLER MOUNTING	1-E8	84	15
COLLAR, PISTON	1-D8	61	19
COLLAR, R. ENGINE HANGER UPPER	1-F6	105	10
COLLAR, R. ENGINE MOUNTING	1-F7	106	12
COLLAR, R. FR. ENGINE HANGER	1-F7	106	16
COLLAR, RADIATOR MOUNTING	1-F5	102	18
COLLAR, RR. AXLE DISTANCE	1-E2	72	9
COLLAR, RR. BRAKE PANEL SIDE	1-E2	72	6
COLLAR, RR. WHEEL SIDE	1-E2	72	5
COLLAR, SPLINE, 28X15.5	1-C4	32	9
COLLAR, SPLINE, 28X15.9	1-C4	32	13
COLLAR, SPRING	1-D8	60	3
COLLAR, STAND RUBBER MOUNTING	1-E10	89	7
COLLAR, SWINGARM PIVOT	1-E11	90	6
	1-E11	90	7
COLLAR, TAILLIGHT MOUNTING	1-F3	99	20
COLLAR, 22X15.1	1-C4	32	5
COLLAR, 28X13.95	1-C4	32	14
COLLAR, 30.2X8.2	1-B6	13	18
COLLAR, 6.5X11X3	1-E9	87	3
CONNECTOR, MASTER CYLINDER	1-D12	68	3
COTTER, VALVE	1-B4	9	15
COUNTER ASSY	1-D2	48	9
COUNTERSHAFT COMP	1-C4	32	3
	1-D2	48	6
COVER A, CYLINDER HEAD	1-B1	2	1
COVER A, MAGNETIC SWITCH	1-E5	78	9
COVER ASSY, R	1-B6	12	1
COVER COMP, B, CYLINDER HEAD	1-B1	2	2
COVER COMP., FR.	1-F7	106	18
COVER COMP., L. INNER	1-B9	19	3
COVER COMP., LICENSE LIGHT	1-F3	98	9
COVER SET, L. SIDE	1-E5	79	27
COVER SET, R. SIDE	1-E5	79	23
COVER, AIR CLEANER	1-E7	82	3
COVER, ALTERNATOR	1-B8	17	1
COVER, BATTERY TERMINAL	1-E5	78	6
	1-E5	78	8
COVER, DUCT	1-F9	110	13
COVER, DUST	1-E9	86	5
COVER, FUSE	1-E5	78	12
COVER, FUSE PLATE	1-D6	57	8
COVER, HEAD PIPE GUSSET	1-F7	106	17
COVER, HEADLIGHT SOCKET	1-D3	50	5
COVER, INDICATOR SWITCH	1-B8	17	3
COVER, L. CRANKCASE	1-B9	19	2
COVER, L. RADIATOR	1-F5	103	25
COVER, L. SIDE DUCT	1-F9	110	12
COVER, R.	1-B6	12	1
COVER, R. RADIATOR	1-F5	103	24
COVER, R. SIDE DUCT	1-F9	110	11
COVER, RUBBER	1-D1	46	12
COVER, STARTER MOTOR TERMINAL	1-E5	78	7
COVER, SUB RADIATOR UNDER	1-F5	103	31
COVER, THERMOSTAT	1-C6	36	3
COVER, WATER PUMP	1-B9	19	7
COWL SET, FR. CENTER	1-F8	109	6
COWL SET, L. FR. SIDE	1-F8	109	5
COWL SET, R. FR. SIDE	1-F8	109	4
COWL SET, RR.	1-E4	76	3
COWL SET, UNDER	1-F9	110	14
COWL, L. INNER	1-F9	110	9
COWL, R. INNER	1-F8	109	8
CRANKSHAFT COMP	1-C2	29	9
CUP	1-B9	19	12
CUP, MASTER CYLINDER OIL	1-D12	68	5
CUSHION, BATTERY	1-E5	78	3
CUSHION, BATTERY UPPER	1-E5	78	17
CUSHION, FUEL PUMP	1-E6	80	2
CUSHION, FUEL TANK RR	1-E3	75	16
CYLINDER ASSY., CLUTCH MASTER	1-D5	54	1
CYLINDER ASSY., CLUTCH SLAVE	1-B9	19	9
CYLINDER ASSY., FR. BRAKE MASTER	1-D4	52	6
CYLINDER ASSY., RR. BRAKE MASTER	1-D12	68	2
CYLINDER SET, MASTER	1-D4	52	14
(D)			
DAMPER, RR. WHEEL	1-E2	72	3
DIAPHRAGM	1-D4	52	12
	1-D5	54	12
	1-D12	68	11
DISK, CLUTCH FRICTION	1-B6	13	8
DISK, L. FR. BRAKE	1-D11	67	14
DISK, R. FR. BRAKE	1-D11	67	13
DISK, RR. BRAKE	1-E2	73	14
DRIVER, 2. PHILLIPS SCREW	1-F8	108	14
DRIVER, 2. STRAIGHT SLOT SCREW	1-F8	108	15
DRUM ASSY., GEARSHIFT	1-C5	34	5
DRUM, GEARSHIFT	1-C5	34	6
DUCT, L. AIR CLEANER IN	1-E7	82	11
DUCT, R. AIR CLEANER IN	1-E7	82	10
DUST SEAL	1-D9	62	59
	1-D10	64	9
	1-E1	71	13
	1-E12	93	30
DUST SEAL, CONNECTING ROD PIVOT	1-E12	93	32
DUST SEAL, STEERING HEAD	1-D7	58	2
	1-D7	58	3
DUST SEAL, 22X35X7	1-E11	91	23
DUST SEAL, 22X42X7	1-D11	67	17
DUST SEAL, 24X40X5.5	1-E11	91	24
DUST SEAL, 30X52X7	1-E2	73	20
DUST SEAL, 40X50X5	1-D11	67	18
(E)			
ELEMENT, AIR CLEANER	1-E7	82	4
EQUALIZER COMP., FR. SHOCK	1-D8	61	49
(F)			
FAN COMP., L. COOLING	1-F5	102	5
FAN COMP., R. COOLING	1-F5	102	4
FENDER A, RR	1-F1	94	5
FENDER B, RR	1-F1	94	7
FENDER COMP., FR	1-D7	59	3
FILTER, OIL	1-B11	23	10
FLANGE COMP., FINAL DRIVEN	1-E2	72	8
FLANGE, STARTER CLUTCH	1-B7	15	4
FLOAT SET	1-C8	40	3
FORK, CENTER GEARSHIFT	1-C5	34	2
FORK, L. GEARSHIFT	1-C5	34	3
FORK, R. GEARSHIFT	1-C5	34	1
FUEL UNIT	1-E3	75	18
FUNNEL, AIR	1-C7	39	21
FUSE A	1-D6	57	22
	1-D6	57	23
FUSE F	1-E5	79	39
(G)			
GASKET	1-E3	74	4
GASKET KIT A	1-C9	42	1
GASKET KIT B	1-C9	43	1
GASKET SET	1-C8	40	1
GASKET, ALTERNATOR COVER	1-B8	17	2
	1-C9	43	3
GASKET, BASE	1-F3	98	4
GASKET, CONNECTING CAP	1-C6	37	20
	1-C9	43	7
GASKET, CYLINDER HEAD	1-B1	3	7
	1-B3	6	6
	1-C9	42	2
GASKET, DRAIN PLUG	1-B12	24	21
	1-C10	44	20
GASKET, EX. PIPE	1-C9	42	4
GASKET, EX. PIPE	1-E8	84	2
GASKET, FR. SHOCK DRAIN VALVE	1-D9	62	57
GASKET, HEAD COVER	1-B1	2	6
	1-C9	42	3
GASKET, INDICATOR SWITCH COVER	1-B8	17	4
	1-C9	43	4
GASKET, L. INNER COVER	1-B9	19	5
	1-C9	43	5
GASKET, LENS	1-F3	98	10
GASKET, MUFFLER	1-E8	84	11
	1-E8	84	12
GASKET, OIL PAN	1-B11	23	2
	1-C9	43	1
GASKET, OIL STRAINER	1-B11	23	7
GASKET, R. COVER	1-B6	12	2
	1-C9	43	2
GASKET, SEAL	1-F2	96	8
	1-F3	98	1
GASKET, WATER PUMP COVER	1-B9	19	8
	1-C9	43	6
GAUGE, FEELER, 0.7	1-F8	108	4
GAUGE, OIL LEVEL	1-B6	12	3
GEAR COMP., STARTER CLUTCH	1-B7	15	3
GEAR, COUNTERSHAFT FIFTH	1-C4	32	15
GEAR, COUNTERSHAFT FOURTH	1-C4	32	11
GEAR, COUNTERSHAFT LOW	1-C4	32	4
GEAR, COUNTERSHAFT SECOND	1-C4	32	7
GEAR, COUNTERSHAFT THIRD	1-C4	32	8
GEAR, MAINSHAFT FIFTH	1-C4	32	12
GEAR, MAINSHAFT FOURTH	1-C4	32	10
GEAR, MAINSHAFT SECOND & THIRD	1-C4	32	6
GEAR, PRIMARY DRIVE	1-B6	13	16
GEAR, SPEEDOMETER	1-D11	66	10
GEAR, STARTER REDUCTION	1-B7	15	2
GENERATOR ASSY., PULSE	1-B7	15	8
GRILL, L. SIDE COVER	1-E5	79	25
GRILL, R. SIDE COVER	1-E5	79	24
GRILLE, RADIATOR	1-F5	102	7
GRIP DRIVER	1-F8	108	16
GRIP, L. HANDLEBAR	1-D3	50	11
GRIP, L. RR.	1-E4	76	15
GRIP, L. SIDE	1-F1	94	12
GRIP, R. HANDLEBAR	1-D3	50	10
GRIP, R. RR.	1-E4	76	9
GRIP, R. SIDE	1-F1	94	10
GROMMET	1-E5	79	18
GROMMET, AIR CLEANER CASE	1-E5	79	21
	1-E5	79	22
	1-F1	94	8
GROMMET, RADIATOR	1-D1	46	2
GROMMET, SWITCH HOLE, 10MM	1-D7	59	4
GROMMET, WIRE	1-F3	99	15
GUARD A, FUEL TANK HEAT	1-E3	74	8
GUARD A, L. LOWER COWL HEAT	1-F9	110	17
GUARD A, R. LOWER COWL HEAT	1-F9	110	16
GUARD B, L. FUEL TANK HEAT	1-E3	74	10
GUARD B, L. LOWER COWL HEAT	1-F9	110	19
GUARD B, R. FUEL TANK HEAT	1-E3	74	9
GUARD B, R. LOWER COWL HEAT	1-F9	110	18
GUARD C, L. FUEL TANK HEAT	1-E3	74	12

DESCRIPTION INDEX

DESCRIPTION	GRID	PAGE	REF.
GUARD C L LOWER COWL HEAT	1-F9	111	21
GUARD C R FUEL TANK HEAT	1-E3	74	11
GUARD C R LOWER COWL HEAT	1-F9	110	20
	1-F9	111	20
GUARD D L FUEL TANK HEAT	1-E3	74	14
GUARD D R FUEL TANK HEAT	1-E3	74	13
GUARD E FUEL TANK HEAT	1-E3	74	15
GUARD WIRE	1-F3	99	16
GUIDE A CAM CHAIN	1-B5	10	8
GUIDE B CAM CHAIN	1-B5	11	14
GUIDE COMP A CAM CHAIN	1-B5	10	6
GUIDE CABLE	1-D6	57	1
GUIDE CLUTCH OUTER	1-B6	13	3
GUIDE DRIVE CHAIN	1-B9	19	4
GUIDE RING	1-C4	32	17
GUIDE VALVE	1-B1	3	1
	1-B3	6	1
(H)			
HANDLE EYE WRENCH 12MM	1-F8	108	17
HARNESS WIRE	1-F4	100	13
HEAD COMP FR CYLINDER	1-B1	3	2
HEAD COMP RR CYLINDER	1-B3	6	4
HEADLIGHT ASSY	1-D1	46	3
HEADLIGHT UNIT	1-D1	46	5
HOLDER A CAMSHAFT	1-B1	3	3
	1-B3	6	2
HOLDER ASSY HELMET	1-F1	94	9
HOLDER B CAMSHAFT	1-B1	3	4
	1-B3	6	3
HOLDER COMP A CAM CHAIN TENSIONER	1-B5	10	11
HOLDER COMP B CAM CHAIN TENSIONER	1-B5	11	13
HOLDER ADJUSTING	1-E12	92	16
HOLDER AXLE	1-D8	61	48
HOLDER FUEL PUMP	1-E6	80	3
HOLDER GREASE	1-D7	58	5
	1-D8	61	24
HOLDER JET NEEDLE	1-C8	41	16
	1-C8	41	17
HOLDER L STEP	1-E9	87	4
HOLDER MASTER CYLINDER	1-D4	52	10
	1-D5	54	10
HOLDER R STEP	1-E9	87	1
HOOD METER	1-D2	49	19
HOOK SEAT CATCH	1-E4	76	7
HORN COMP HIGH	1-F8	109	2
HOSE A RADIATOR	1-F5	103	26
HOSE A WATER	1-C6	36	14
HOSE B FR BRAKE	1-D4	52	4
HOSE B WATER	1-C6	36	17
HOSE C RADIATOR	1-F5	103	28
HOSE COMP RR SHOCK	1-E12	92	5
HOSE, CANISTER	1-F11	114	5
HOSE, CONNECTING	1-C6	36	4
HOSE, DRAIN	1-E11	90	9
HOSE, FUEL 5 3X280	1-E6	81	20
HOSE, FUEL, 5 3X430	1-E6	80	8
HOSE, L FR BRAKE	1-D4	52	2
HOSE, MASTER CYLINDER	1-D12	68	6
HOSE, R FR BRAKE	1-D4	52	3
HOSE, RADIATOR	1-F5	103	27
	1-F6	105	1
	1-F6	105	2
HOSE, RR BRAKE	1-D12	68	1
(I)			
INNER ONE WAY CLUTCH	1-B6	13	6
INSULATOR, CARBURETOR	1-B1	3	8
	1-B3	6	7
(J)			
JET, MAIN	1-C8	41	22
JET, MAIN, #112	1-C8	41	21
JET, MAIN, #150	1-C8	41	21
JET, NEEDLE	1-C8	41	15
JET, PRIMARY MAIN, #145	1-C8	41	22
JET, SECONDARY MAIN	1-C8	41	22
JET, SLOW, #38	1-C8	41	23
JOINT B, WASHER TUBE	1-F11	114	8
JOINT SET A, FUEL	1-C7	38	6
	1-C7	38	7
JOINT SET C, FUEL	1-C7	38	4
JOINT SET D, FUEL	1-C7	38	12
JOINT SET, FUEL	1-C7	38	13
JOINT, BOOST	1-B3	6	8
JOINT, BRAKE ROD	1-D12	68	15
JOINT, EX PIPE	1-E8	84	1
JOINT, FUEL TUBE	1-E6	80	7
JOINT, OIL TUBE	1-F5	103	34
JOINT, RR GRIP	1-E4	76	14
JOINT, TUBE	1-E11	90	1
	1-F5	103	21
JOINT, TWO WAY	1-D4	52	5
JOINT, VACUUM TUBE	1-C7	39	27
JOINT, 3 WAY	1-F11	114	4
(K)			
KEY SET	1-D6	57	2
KEY, BLANK	1-D6	57	5
KEY, WOODRUFF	1-C3	31	12
(L)			
LABEL ACCESSORIES & LOADING CAUTION	1-F1	94	15
LABEL, BATTERY CAUTION	1-E5	79	28
LABEL, DRIVE CAUTION	1-E3	75	22
LABEL, DRIVE CHAIN CAUTION	1-E11	90	15
LABEL, FAIRING MARK	1-F9	111	22

DESCRIPTION INDEX

DESCRIPTION	GRID	PAGE	REF.
LABEL, FR FORK CAUTION	1-E3	75	21
LABEL, FR SHOCK	1-D8	61	37
LABEL, HELMET HOLDER	1-F1	94	14
LABEL, RADIATOR CAUTION	1-E5	79	29
LABEL, RESERVE TANK	1-F5	103	39
LABEL, RR SHOCK ABSORBER CAUTION	1-F7	106	19
LABEL, RR SHOCK ABSORBER DAMPING FORCE ADJUSTMENT	1-F7	106	20
LABEL, TIRE CAUTION	1-E11	90	14
LABEL, WIND SCREEN CAUTION	1-F9	111	23
LENS COMP., COMBINATION METER	1-D2	48	4
LENS COMP., TURN SIGNAL	1-F2	96	4
LENS, LICENSE	1-F3	98	7
LEVER COMP., L HANDLEBAR	1-D5	54	14
LEVER COMP., R HANDLEBAR	1-D4	52	15
LEVER SET A, LINK	1-C7	38	1
LEVER, CHOKE	1-D3	50	4
LEVER, FUEL VALVE	1-E3	74	2
LIGHT ASSY., LICENSE	1-F3	98	5
LINK SET A, STARTER	1-C7	38	2
LINK SET B, STARTER	1-C7	38	5
LINK SET C, STARTER	1-C7	38	9
LINK, TORQUE	1-E1	70	10
LOCK ASSY., SEAT	1-E4	76	8
(M)			
MAINSHAFT	1-C4	32	1
MARK, RR COWL	1-F10	112	3
MARK, UNDER COWL	1-F10	112	2
METAL, BUSH	1-E12	92	6
METER ASSY., COMBINATION	1-D2	48	3
METER ASSY., FUEL	1-D2	48	11
METER ASSY., TEMPERATURE	1-D2	48	13
MIRROR, L	1-D3	50	13
	1-D3	51	13
MIRROR, R	1-D3	50	12
MOTOR ASSY., L FAN	1-F5	102	9
MOTOR ASSY., R FAN	1-F5	102	6
MOTOR ASSY., STARTER	1-B11	22	1
MOULDING, WIND SCREEN	1-F9	110	10
MUFFLER COMP., L	1-E8	84	16
MUFFLER COMP., R	1-E8	84	5
(N)			
NECK ASSY., FILLER	1-F5	102	10
NEEDLE, FR JET	1-C8	41	15
NEEDLE, RR JET	1-C8	41	15
NET COMP., AIR CLEANER BASE	1-E7	82	9
(O)			
O RING, 13X2 5	1-C6	37	24
OIL SEAL, 12.5X25X8	1-C1	26	13
OIL SEAL, 14X24X6	1-C1	26	14
OIL SEAL, 34X62 2X7	1-E2	73	19
OIL SEAL, 40X58X9	1-B10	20	19
OIL SEAL, 40X62X6	1-B10	20	20
OIL SEAL, 65X80X10 5	1-E12	93	31
OIL SEAL, 8X18X5	1-B10	20	21
OIL SEAL, 8X25X8	1-B9	19	18
OIL-SEAL, 24X34X5 5	1-E11	91	22
OPEN END WRENCH, 10X12	1-F8	108	11
OPEN END WRENCH, 14X17	1-F8	108	12
ORIFICE, OIL CONTROL	1-B9	19	15
OUTER COMP., CLUTCH	1-B6	13	2
OUTER COMP., STARTER CLUTCH	1-B7	15	5
(P)			
PACKING	1-D8	60	16
PACKING, AIR CLEANER BASE	1-E7	82	8
PACKING, ELEMENT	1-E7	82	5
PAD COMP., FR	1-D10	64	7
PAD COMP., RR	1-E1	70	3
PAN, OIL	1-B11	23	1
PANEL, ELECTRIC	1-E6	80	15
PEDAL ASSY., GEARSHIFT	1-E9	86	1
PEDAL COMP., GEARSHIFT	1-E9	86	4
PEDAL COMP., RR BRAKE	1-E9	86	8
PIECE B, OIL LOCK	1-D8	61	43
PIECE, CLUTCH JOINT	1-B6	13	12
PIECE, OIL LOCK	1-D8	61	20
PIN A, TENSIONER ARM	1-B5	10	12
PIN, BRAKE ROD	1-D12	68	14
PIN, DOWEL, 10X16	1-C1	26	17
PIN, DOWEL, 12X20	1-B2	4	24
	1-B3	7	21
PIN, DOWEL, 12X24	1-B2	4	20
	1-B3	7	17
PIN, DOWEL, 8X14	1-B2	4	23
	1-B3	7	20
	1-B6	12	7
	1-B10	20	25
	1-B12	24	23
	1-C1	26	16
PIN, DOWEL, 8X8	1-B7	15	14
PIN, HANGER	1-D10	65	20
	1-E1	71	19
PIN, KNOCK	1-C7	39	23
PIN, KNOCK, 8X14	1-B11	23	15
PIN, LOCK, 10MM	1-E1	71	26
PIN, LOCK, 6MM	1-B5	11	22
PIN, LOCK, 8MM	1-B5	11	23
PIN, PISTON	1-B7	15	1
	1-C2	29	3
PIN, PISTON 10X33	1-B7	15	1
PIN, SHIFT RETURN SPRING	1-C5	34	19
PIN SPECIAL LOCK, 6MM	1-B5	11	21
PIN, SPLIT, 1.6	1-E12	93	35
PIN, SPLIT, 1.6X15	1-D12	69	23
	1-E10	88	23
PIN, SPLIT, 1.6X25	1-D12	69	23
	1-E10	88	23

DESCRIPTION INDEX

DESCRIPTION	GRID	PAGE	REF.
PIN, SPLIT, 2 0X18	1-E1	71	25
PIN, SPLIT, 2 0X20	1-E1	71	25
PIN, SPLIT, 2 0X22	1-E1	71	25
PIN, SPLIT, 2 0X25	1-B12	24	22
	1-E1	71	25
PIN, SPLIT, 2 0X32	1-B12	24	22
	1-E1	71	25
PIN, SPLIT, 2 0X35	1-B12	24	22
	1-E1	71	25
PIN, SPLIT, 2 5X25	1-E10	89	13
PIN, SPLIT, 2 5X30	1-E10	89	13
PIN, STEP BAR JOINT	1-E9	87	13
PIN, STEP PLATE	1-E9	87	12
PIN, 8X43 2	1-B5	10	10
PIPE A, OIL PATH	1-B1	3	5
	1-B3	6	5
PIPE A, WATER	1-C6	36	13
PIPE ASSY, CLUTCH	1-D5	54	5
PIPE B, OIL PATH	1-B1	3	6
PIPE B, WATER	1-C6	36	15
PIPE COMP., L. FR. SHOCK	1-D8	61	39
PIPE COMP., R. FR. SHOCK	1-D8	60	10
PIPE COMP., SEAT	1-D8	61	26
PIPE, CONNECTING	1-C6	36	6
PIPE, L. HANDLEBAR	1-D6	57	10
PIPE, L. RR. EX.	1-E8	84	13
PIPE, MAIN STAND PIVOT	1-E10	89	3
PIPE, OIL	1-B11	23	11
PIPE, OIL STRAINER	1-B11	23	5
PIPE, R. HANDLEBAR	1-D6	57	9
PIPE, R. RR. EX.	1-E8	84	6
PIPE, SEAT	1-D8	61	44
PIPE, THROTTLE GRIP	1-D3	50	9
PIPE, WATER OUTLET CONNECTING	1-C6	36	5
PISTON	1-C2	29	2
	1-D8	61	22
	1-D10	64	1
	1-E1	70	4
PISTON COMP., VACUUM	1-C8	40	14
	1-C8	41	14
PISTON SET, CLUTCH MASTER CYLINDER	1-D5	54	4
PISTON SET, MASTER CYLINDER	1-D12	68	9
PISTON, SLAVE CYLINDER	1-B9	19	10
PLATE	1-D10	65	21
	1-E1	71	20
PLATE A, DRUM SETTING	1-C5	34	8
PLATE ASSY, FUSE	1-D6	57	6
PLATE B, CLUTCH	1-B6	13	9
PLATE B, DRUM SETTING	1-C5	34	9
PLATE B, STEP	1-E9	87	10
	1-E9	87	11
PLATE COMP., ADJUSTER	1-D8	61	46
PLATE COMP., L. COVER	1-B9	19	1
PLATE SET, STAY	1-C7	38	11
PLATE SET, VALVE	1-C8	40	7
PLATE, BEARING SETTING	1-C4	32	2
PLATE, CLUTCH LIFTER	1-B6	13	11
PLATE, CLUTCH PRESSURE	1-B6	13	10
PLATE, DIAPHRAGM	1-D4	52	11
PLATE, DIAPHRAGM	1-D5	54	11
	1-D12	68	12
PLATE, DRUM CAM	1-C5	34	7
PLATE, ENGINE HANGER CENTER	1-F7	106	13
PLATE, HEAT GUARD	1-F6	105	3
PLATE, OIL SEPARATE	1-B1	2	3
PLATE, REFLECTING	1-D2	48	5
PLATE, SEAT LOCK	1-E4	76	4
PLATE, SETTING	1-C7	38	15
PLATE, SPRING JOINT	1-D8	60	6
PLATE, SPRING SETTING	1-B6	13	7
PLATE, TOOL SETTING	1-F1	94	6
PLIERS, 135MM	1-F8	108	13
PLUG, BREATHER TUBE	1-E7	83	15
PLUG, SPARK	1-B2	4	26
	1-B2	5	26
	1-B3	7	22
PROTECTOR	1-D4	52	8
	1-D5	54	8
PROTECTOR COMP., HEAT	1-E7	82	2
PROTECTOR, RR. EX. PIPE	1-E8	84	4
PUMP ASSY., FUEL	1-E6	80	1
PUMP ASSY., OIL	1-B11	23	3
PUMP COMP., WATER	1-B9	19	6
(R)			
RADIATOR COMP., MAIN	1-F5	102	1
RECTIFIER ASSY	1-F4	100	12
RECTIFIER ASSY., REGULATE	1-E6	80	10
REFLECTOR, FR. REFLEX	1-F5	103	35
REFLECTOR, REFLEX	1-F1	94	3
REFLECTOR, RR. REFLEX	1-F3	98	11
RELAY COMP., TURN SIGNAL	1-E6	80	13
RELAY, FUEL CUT	1-E6	80	11
RETAINER, BRACKET	1-D10	64	12
RETAINER, GEAR BOX	1-D11	66	7
RETAINER, RR. BRACKET	1-E1	70	7
RETAINER, VALVE SPRING	1-B4	8	12
RING B, STOPPER	1-E12	92	11
RING SET, PISTON	1-C2	29	1
RING, BACK UP	1-D8	60	12
	1-E12	92	17
RING, DAMPER	1-C4	33	18
RING, MOUNTING	1-D1	46	10
	1-D1	46	11
RING, PISTON	1-D8	61	23
RING, RETAINING	1-D1	46	4
RING, STOPPER	1-D8	60	8
	1-D8	60	9
	1-D8	61	29
ROD ASSY, A, FR. CONNECTING	1-C2	29	4
ROD ASSY, A, RR. CONNECTING	1-C2	29	6
ROD ASSY, B, FR. CONNECTING	1-C2	29	4
ROD ASSY, B, RR. CONNECTING	1-C2	29	6
ROD ASSY, C, FR. CONNECTING	1-C2	29	4
ROD ASSY, C, RR. CONNECTING	1-C2	29	6
ROD ASSY, D, FR. CONNECTING	1-C2	29	4
ROD ASSY, D, RR. CONNECTING	1-C2	29	6

DESCRIPTION INDEX

DESCRIPTION	GRID	PAGE	REF.
ROD ASSY, E, FR. CONNECTING	1-C2	29	4
ROD ASSY, E, RR. CONNECTING	1-C2	29	6
ROD ASSY., SHOCK CONNECTING	1-E12	92	8
ROD COMP., PUSH	1-D12	68	10
ROD SET A, STARTER LINK	1-C7	38	3
ROD SET B, STARTER LINK	1-C7	38	10
ROD SET, ADJUSTER	1-D8	61	47
ROD, CLUTCH LIFTER	1-B6	13	15
ROD, PUSH	1-D5	54	2
ROLLER, 15X16	1-B8	16	16
ROLLER, 4X13 8	1-C5	35	26
ROLLER, 6X18	1-B8	16	17
ROTOR COMP	1-B8	17	6
ROTOR, NEUTRAL SWITCH	1-B8	17	10
RUBBER A, STAND STOPPER	1-E8	85	27
RUBBER., SCREEN SEAL	1-D2	49	21
RUBBER, AIR CLEANER CASE MOUNTING	1-D1	46	1
	1-E5	78	1
RUBBER, BATTERY BOX	1-E5	79	26
RUBBER, BATTERY BOX MOUNTING	1-E5	78	16
RUBBER, FILLER NECK STOPPER	1-F5	102	11
RUBBER, FR. COWL SIDE	1-E3	74	7
RUBBER, FR. FENDER MOUNTING	1-F3	99	14
RUBBER, FR. SHROUD	1-F5	103	30
RUBBER, FUEL TANK FR.	1-F8	109	1
RUBBER, FUEL TANK SIDE	1-E3	74	6
RUBBER, GEARSHIFT	1-E9	86	2
RUBBER, HEAT GUARD SEAL	1-F6	105	4
RUBBER, L. RR. GRIP	1-E4	76	11
	1-E4	76	13
RUBBER, MAGNETIC SHOCK	1-E5	78	13
RUBBER, METER VISOR	1-D2	48	17
RUBBER, MOUNTING	1-B1	2	10
	1-F5	102	12
RUBBER, MUFFLER MOUNTING	1-E8	84	14
RUBBER, PURGE CONTROL VALVE MOUNTING	1-C7	39	31
RUBBER, R. RR. GRIP	1-E4	76	10
	1-E4	76	12
RUBBER, RADIATOR MOUNTING	1-F5	102	16
	1-F5	102	17
RUBBER, SEAT STOPPER	1-E4	76	5
RUBBER, STAND	1-E10	89	6
RUBBER, STEP	1-E9	87	7
	1-E9	87	8
RUBBER, STOPPER	1-D8	61	27
RUBBER, TAILLIGHT CUSHION	1-F3	99	17
RUBBER, TAILLIGHT MOUNTING	1-E3	75	20
(S)			
SCREEN, WIND	1-F9	110	15
SEAL B, WATER PIPE	1-C6	37	23
SEAL SET, FR. SHOCK	1-D8	61	36
SEAL, AIR CLEANER COVER	1-E7	82	6
SEAL, PISTON	1-D10	65	18
	1-E1	71	18
SEAL, RUBBER	1-F4	100	3
SEAL, VALVE STEM	1-B4	8	1
	1-C9	42	1
SEAT ASSY., DOUBLE	1-E4	76	1
SEAT, SPRING	1-D8	60	7
SEAT, VALVE SPRING	1-B4	9	13
SEAT, VALVE SPRING INNER	1-B4	9	14
SENDING UNIT, WATER TEMPERATURE	1-C6	36	18
SENSOR, STOP & TAILLIGHT	1-F1	94	4
SHAFT COMP., GEARSHIFT FORK	1-C5	34	4
SHAFT, SHIFT DRUM STOPPER PIVOT	1-C5	34	13
SHAFT, SHOCK ARM UPPER	1-E12	92	9
SHAFT, VALVE ROCKER ARM	1-B4	8	7
SHIM, DAMPING	1-D11	66	12
SHOCK ABSORBER ASSY., L. FR.	1-D8	61	38
SHOCK ABSORBER ASSY., R. FR.	1-D8	60	1
SHOCK ABSORBER ASSY., RR.	1-E12	92	2
SHROUD COMP., L.	1-F5	102	3
SHROUD COMP., R.	1-F5	102	2
SHROUD, FR. RADIATOR	1-F5	103	29
SLEEVE	1-D10	64	11
	1-E1	71	14
SLEEVE, FR. CALIPER BRACKET	1-D10	65	22
SLEEVE, RR. AXLE	1-E2	72	7
SLIDER, CHAIN	1-E11	90	12
	1-E11	90	13
SOCKET COMP	1-D2	48	14
SOCKET COMP., L. TURN SIGNAL	1-F2	96	7
	1-F2	96	13
SOCKET COMP., R. TURN SIGNAL	1-F2	96	3
	1-F2	96	11
SPANNER, 8	1-F8	108	10
SPARK UNIT	1-F1	94	1
	1-F1	94	2
SPEEDOMETER ASSY	1-D2	48	8
SPINDLE COMP., GEARSHIFT	1-C5	34	16
SPRING	1-C8	40	11
	1-C8	40	12
SPRING, ADJUSTING	1-D1	46	8
SPRING, BRAKE PEDAL	1-E9	86	10
SPRING, CARBON BRUSH	1-B11	22	3
SPRING, CLICK	1-D8	61	21
SPRING, CLUTCH	1-B6	13	14
SPRING, ELEMENT SETTING	1-E7	82	7
SPRING, FR. SHOCK	1-D8	60	2
SPRING, FR. VACUUM PISTON	1-C8	40	9
SPRING, GEARSHIFT ARM	1-C5	34	17
SPRING, GEARSHIFT RETURN	1-C5	34	18
SPRING, LOCK KEY SETTING	1-E4	76	6
SPRING, MAIN STAND	1-E10	89	2
SPRING, NEUTRAL STOPPER	1-C5	34	15
SPRING, OIL LOCK	1-D8	60	4
SPRING, PAD	1-D10	64	8
	1-E1	70	5
SPRING, PISTON	1-D8	60	17
SPRING, REBOUND	1-D8	60	11
SPRING, RR. VACUUM PISTON	1-C8	40	10
SPRING, SHIFT DRUM STOPPER	1-C5	34	14
SPRING, SIDE STAND	1-E10	89	5

DESCRIPTION INDEX

DESCRIPTION	GRID	PAGE	REF.
SPRING, SLAVE CYLINDER	1-B9	19	11
SPRING, STARTER CLUTCH ROLLER	1-B7	15	6
SPRING, STEP RETURN	1-E9	87	2
SPRING, STOP SWITCH	1-E9	86	7
SPRING, TENSIONER	1-B5	10	4
SPRING, VALVE INNER	1-B4	8	11
SPRING, VALVE OUTER	1-B4	8	10
SPROCKET COMP., FINAL DRIVEN	1-E2	72	2
SPROCKET COMP., OIL PUMP DRIVEN	1-B6	13	1
SPROCKET, CAM	1-B5	10	1
SPROCKET, DRIVE	1-C4	32	16
SPROCKET, OIL PUMP DRIVEN	1-B11	23	4
STABILIZER, FR. SHOCK	1-D8	61	50
STAND COMP., MAIN	1-E10	89	1
STATOR COMP.	1-B8	17	7
STAY A, IGNITION COIL	1-F4	100	6
STAY A, PULSE GENERATOR	1-B7	15	10
STAY B, IGNITION COIL	1-F4	100	7
STAY B, PULSE GENERATOR	1-B7	15	11
STAY, CATCH TANK	1-E7	83	17
STAY, FAIRING	1-F8	109	3
STAY, L. HEADLIGHT	1-D1	46	15
STAY, R. HEADLIGHT	1-D1	46	14
STAY, TURN SIGNAL	1-F2	96	14
STEM COMP., STEERING	1-D7	58	1
STOPPER, CHAIN ADJUSTER	1-E11	90	11
STRAINER COMP., FUEL	1-E6	80	4
STRAINER, OIL	1-B11	23	6
STRIPE A, L. FR. COWL	1-F10	113	11
STRIPE A, R. FR. COWL	1-F10	112	10
STRIPE B, L. FR. COWL	1-F10	112	9
STRIPE B, R. FR. COWL	1-F10	112	8
STRIPE, FUEL TANK	1-F10	112	1
STRIPE, L. RR. COWL	1-F10	112	5
STRIPE, L. SIDE COVER	1-F10	112	7
STRIPE, R. RR. COWL	1-F10	112	4
STRIPE, R. SIDE COVER	1-F10	112	6
SUB FRAME COMP.	1-F6	105	11
	1-F7	106	11
SUB RADIATOR COMP.	1-F5	102	15
SUB WIRE, HORN	1-F4	100	18
SUSPENSION, FUEL CUT RELAY	1-E6	80	12
SUSPENSION, TURN SIGNAL RELAY	1-E6	80	14
SWINGARM, RR	1-E11	90	10
SWITCH ASSY., CLUTCH	1-D5	54	6
SWITCH ASSY., COMBINATION & LOCK	1-D6	57	3
SWITCH ASSY., FR. STOP	1-D4	52	1
SWITCH ASSY., NEUTRAL	1-B8	17	9
SWITCH ASSY., OIL PRESSURE	1-B12	25	3
SWITCH ASSY., RR. STOP	1-E9	86	6
SWITCH ASSY., STARTER MAGNETIC	1-E5	78	11
SWITCH ASSY., STARTER/KILL	1-D3	50	7
SWITCH ASSY., TURN SIGNAL	1-D3	50	8
SWITCH, OIL PRESSURE	1-B12	25	3

(T)

DESCRIPTION	GRID	PAGE	REF.
TACHOMETER ASSY.	1-D2	48	10
TAILLIGHT UNIT	1-F3	98	2
TANK SET, FUEL	1-E3	74	5
TANK, CATCH AND STORAGE	1-E7	83	16
TANK, RESERVE	1-F5	102	19
TENSIONER, CAM CHAIN	1-B5	10	5
THERMOSTAT	1-C6	36	1
THERMOSWITCH ASSY.	1-F5	103	38
THREAD B, STEERING HEAD UPPER	1-D7	58	8
THREAD COMP., STEERING HEAD TOP	1-D7	58	4
TIRE ASSY., FR.	1-D11	66	8
TIRE ASSY., RR.	1-E2	72	12
TOOL SET	1-F8	108	2
TOP COMP.	1-C8	40	13
TUBE	1-C7	39	26
TUBE, AIR CLEANER BREATHER	1-E7	83	14
TUBE, AIR VENT	1-C7	39	25
TUBE, AIR VENT CONTROL VALVE	1-F11	114	3
TUBE, BATTERY	1-E5	78	14
TUBE, BREATHER	1-B1	2	4
	1-E7	82	13
TUBE, BREATHER DRAIN	1-E7	82	12
TUBE, FUEL	1-C7	39	22
	1-E6	80	6
TUBE, FUEL, 3.5X170	1-C7	39	36
TUBE, FUEL, 4.5X180	1-C7	39	38
TUBE, FUEL, 4.5X80	1-C7	39	37
TUBE, FUEL, 7.3X235	1-E6	80	5
TUBE, LEVEL	1-F5	103	20
TUBE, OUTER VENT	1-F11	114	2
TUBE, OVER FLOW	1-F5	103	23
TUBE, PB	1-C7	39	29
TUBE, PURGE CONTROL VALVE JOINT	1-F11	114	7
TUBE, SCREW	1-D1	46	6
TUBE, TENSIONER SPRING	1-B5	10	9
TUBE, VINYL, 14X18X20	1-E9	86	15
TUBE, VINYL, 17.5X20.5X70	1-E10	89	14
TUBE, 3.5X250	1-F11	114	14
TUBE, 3.5X570	1-F11	114	15
TUBE, 5.3X680	1-F11	114	16
TUBE, 7X600	1-F5	103	52
TUBE, 7X700	1-F5	103	53
TURN SIGNAL ASSY., L. FR.	1-F2	96	6
TURN SIGNAL ASSY., L. RR.	1-F2	96	12
TURN SIGNAL ASSY., R. FR.	1-F2	96	1
TURN SIGNAL ASSY., R. RR.	1-F2	96	9

(V)

DESCRIPTION	GRID	PAGE	REF.
VALVE ASSY., AIR VENT CONTROL	1-C7	39	28
VALVE ASSY., FUEL	1-E3	74	1
VALVE ASSY., RELIEF	1-B11	23	9
VALVE COMP., AIR	1-D8	61	34
	1-E12	92	1
VALVE COMP., PURGE CONTROL	1-C7	39	30
VALVE SET, FLOAT	1-C8	40	2
VALVE SET, STARTER	1-C8	40	8
VALVE, EX.	1-B4	8	9
VALVE, EXTENSION	1-F8	108	1
VALVE, IN.	1-B4	8	8
VALVE, OIL LOCK	1-D8	60	5
VALVE, RIM	1-D11	66	2
	1-E2	72	13
VISOR, METER	1-D2	49	18

(W)

DESCRIPTION	GRID	PAGE	REF.
WEIGHT, BALANCE	1-D11	66	1
	1-E2	72	11
WHEEL COMP., FR.	1-D11	66	6
WHEEL COMP., RR.	1-E2	72	10
WIRE COMP., LICENSE LIGHT	1-F3	98	8
WIRE COMP., TAILLIGHT	1-F3	98	3
WIRE, GUARD	1-C6	36	9
WRENCH, EYE, 10X12	1-F8	108	9
WRENCH, EYE, 22MM	1-F8	108	18
WRENCH, EYE, 27MM	1-F8	108	19
WRENCH, HEX., 5MM	1-F8	108	7
WRENCH, HEX., 6MM	1-F8	108	6
WRENCH, HEX., 8MM	1-F8	108	8
WRENCH, PLUG	1-F8	108	5